LXM32iECT, BMi

Lexium 32i

Product manual

V1.00, 07.2013

EtherCAT®

0198441113956, V1.00, 07.2013

www.schneider-electric.com

Schneider Electric

Important information

This manual is part of the product.

Carefully read this manual and observe all instructions.

Keep this manual for future reference.

Hand this manual and all other pertinent product documentation over to all users of the product.

Carefully read and observe all safety instructions as well as chapter "2 Before you begin - safety information".

Some products are not available in all countries.
Please consult the latest catalog for information on the availability of products.

Subject to technical modifications without notice.

All details provided are technical data which do not constitute warranted qualities.

Most of the product designations are registered trademarks of their respective owners, even if this is not explicitly indicated.

0198441113956, V1.00, 07.2013

Table of contents

Important information **2**

Table of contents **3**

About the book **11**

Further reading 12

1 Introduction **13**

1.1 Device overview 13

1.2 Type code 15

2 Before you begin - safety information **17**

2.1 Qualification of personnel 17

2.2 Intended use 17

2.3 Hazard categories 18

2.4 Basic information 19

2.5 Functional safety 20

2.6 Standards and terminology 21

3 Technical Data **23**

3.1 Ambient conditions 24
3.1.1 Ambient conditions for transportation and storage 24
3.1.2 Ambient conditions operation 24

3.2 Dimensional drawings 26

3.3 General features 28

3.4 Signals 30

3.5 Functional safety 32

3.6 Motor and power stage 33
3.6.1 Motor-specific data 33
3.6.1.1 BMi 115V_{ac} single-phase 33
3.6.1.2 BMi 230V_{ac} single-phase 34
3.6.1.3 BMi 208V_{ac} three-phase 35
3.6.1.4 BMi 400V_{ac} three-phase 36
3.6.1.5 BMi 480V_{ac} three-phase 37
3.6.2 Shaft-specific data 38
3.6.2.1 Force for pressing on 38
3.6.2.2 Shaft load 39
3.6.3 Holding brake (option) 40
3.6.4 Encoder 41

0198441113956, V1.00, 07.2013

3.7 Braking resistor ... 42
3.7.1 Data for calculation of the braking resistor ... 42
3.7.2 DC bus data for calculation of the braking resistor ... 43
3.7.3 External braking resistors (accessories) ... 43
3.8 Internal mains filter ... 44
3.9 Tightening torque and screws ... 45
3.10 Conditions for UL 508C ... 46
3.11 Certifications ... 46
3.12 Declaration of conformity ... 47
3.13 TÜV certificate for functional safety ... 50
4 Basics ... 51
4.1 Functional safety ... 51
5 Engineering ... 53
5.1 Electromagnetic compatibility, EMC ... 54
5.2 Cables ... 56
5.2.1 Overview of the required cables ... 58
5.3 Residual current device ... 59
5.4 Wiring concept ... 60
5.5 Operation in an IT mains ... 60
5.6 Mains reactor ... 61
5.7 Mains filter ... 62
5.7.1 Deactivating the Y capacitors ... 62
5.8 Rating the braking resistor ... 63
5.8.1 Standard braking resistor ... 64
5.8.2 External braking resistor ... 64
5.8.3 Rating information ... 65
5.9 Safety function STO ("Safe Torque Off") ... 69
5.9.1 Definitions ... 69
5.9.2 Function ... 69
5.9.3 Requirements for using the safety function ... 70
5.9.4 Protected cable installation for safety-related signals ... 72
5.9.5 Application examples STO ... 74
5.10 Logic type ... 76
5.11 Monitoring functions ... 77
5.12 Configurable inputs and outputs ... 78
5.13 Mounting types of the modules ... 79
6 Installation ... 81
6.1 Before mounting ... 83
6.2 Mounting the motor ... 84

0198441113956, V1.00, 07.2013

6.3 Electrical installation ... 87
6.3.1 Ground connection ... 88
6.3.2 Mounting LXM32i ... 89
6.3.3 I/O module with industrial connectors ... 90
6.3.3.1 Overview I/O module with industrial connectors ... 90
6.3.3.2 Logic type ... 91
6.3.3.3 Connection of the digital inputs ... 91
6.3.3.4 Connection of safety function STO ... 92
6.3.3.5 Fieldbus connection ... 93
6.3.4 I/O module with spring terminals ... 94
6.3.4.1 Opening the I/O module ... 94
6.3.4.2 Overview I/O module with spring terminals ... 95
6.3.4.3 Setting the logic type ... 96
6.3.4.4 Connecting the digital inputs/outputs ... 97
6.3.4.5 Connection of safety function STO ... 99
6.3.4.6 Fieldbus connection ... 102
6.3.4.7 Connecting the signals ... 104
6.3.4.8 Closing the I/O module ... 105
6.3.5 Mounting the I/O connection module ... 106
6.3.6 Braking resistor ... 107
6.3.6.1 Standard braking resistor ... 107
6.3.6.2 Connection module for external braking resistor (accessories) ... 108
6.3.7 Mains supply ... 111
6.3.7.1 Connection module for mains supply ... 112
6.3.8 Commissioning interface ... 115

6.4 Checking installation ... 116

7 Commissioning ... 117

7.1 Basic information ... 117

7.2 Overview ... 120

7.3 ESI file (EtherCAT Slave Information) ... 122

7.4 Add the product as an NC axis in "TwinCAT" ... 123
7.4.1 Adding the product to TwinCAT ... 123
7.4.2 Setting the process data ... 124
7.4.2.1 First predefined PDO ... 124
7.4.2.2 Second predefined PDO ... 125
7.4.2.3 Third predefined PDO ... 125
7.4.2.4 Fourth predefined PDO ... 126
7.4.3 Setting monitoring of the position deviation ... 127
7.4.4 Setting the scaling factor ... 128
7.4.5 Setting homing ... 128
7.4.6 Setting the output scaling ... 129
7.4.7 Setting the velocity gain Kv of the position controller ... 129
7.4.8 List of the startup parameters ... 130
7.4.8.1 Additional parameters for the operating mode Cyclic Synchronous Velocity ... 135
7.4.9 Setting EtherCAT "Identification" ... 138

7.5 Commissioning procedure ... 140
7.5.1 Operating state (state diagram) ... 140
7.5.2 Setting limit values ... 141

0198441113956, V1.00, 07.2013

7.5.3 Digital inputs / outputs ... 144
7.5.4 Testing the signals of the limit switches ... 145
7.5.5 Testing the safety function STO ... 146
7.5.6 Holding brake (option) ... 147
7.5.6.1 Releasing the holding brake manually ... 148
7.5.7 Checking the direction of movement ... 149
7.5.8 Setting parameters for encoder ... 151
7.5.8.1 Adjustment of the absolute position ... 152
7.5.8.2 Shifting the working range ... 153
7.5.9 Setting the braking resistor parameters ... 155
7.5.10 Autotuning the device ... 157
7.5.11 Enhanced settings for autotuning ... 161

7.6 Controller optimization with step response ... 164
7.6.1 Controller structure ... 164
7.6.2 Optimization ... 165
7.6.3 Optimizing the velocity controller ... 167
7.6.4 Checking and optimizing default settings ... 172
7.6.5 Optimizing the position controller ... 173

7.7 Memory Card ... 176
7.7.1 Data exchange with the memory card ... 177

7.8 Duplicating existing device settings ... 178

7.9 Resetting the user parameters ... 179

7.10 Restoring factory settings ... 180

8 Operation ... 181

8.1 Access channels ... 184

8.2 Operating states ... 186
8.2.1 State diagram ... 186
8.2.2 State transitions ... 188
8.2.3 Indication of the operating state ... 189
8.2.3.1 Signal outputs ... 189
8.2.3.2 Fieldbus ... 189
8.2.4 Changing the operating state ... 191
8.2.4.1 Signal inputs ... 191
8.2.4.2 Fieldbus ... 193

8.3 Operating modes ... 194
8.3.1 Starting and changing an operating mode ... 194
8.3.2 Operating mode Jog ... 196
8.3.2.1 Continuous movement ... 198
8.3.2.2 Step movement ... 199
8.3.2.3 Parameterization ... 200
8.3.2.4 Additional settings ... 202
8.3.2.5 Example of a movement via DS402 objects ... 203
8.3.3 Operating mode Profile Torque ... 204
8.3.3.1 Parameterization ... 206
8.3.3.2 Additional settings ... 207
8.3.3.3 Example of a movement via DS402 objects ... 208
8.3.4 Operating mode Profile Velocity ... 209
8.3.4.1 Parameterization ... 210

0198441113956, V1.00, 07.2013

8.3.4.2 Additional settings ... 211
8.3.4.3 Example of a movement via DS402 objects ... 212
8.3.5 Operating mode Profile Position ... 214
8.3.5.1 Parameterization ... 216
8.3.5.2 Additional settings ... 217
8.3.5.3 Example of a movement via DS402 objects ... 218
8.3.6 Operating mode Homing ... 220
8.3.6.1 Parameterization ... 222
8.3.6.2 Reference movement to a limit switch ... 227
8.3.6.3 Reference movement to the reference switch in positive direction ... 228
8.3.6.4 Reference movement to the reference switch in negative direction ... 229
8.3.6.5 Reference movement to the index pulse ... 230
8.3.6.6 Position setting ... 231
8.3.6.7 Additional settings ... 232
8.3.6.8 Example of a movement via DS402 objects ... 233
8.3.7 Operating mode Cyclic Synchronous Torque ... 234
8.3.8 Operating mode Cyclic Synchronous Velocity ... 235
8.3.9 Operating mode Cyclic Synchronous Position ... 236

8.4 Movement range ... 237
8.4.1 Zero point of the movement range ... 237
8.4.2 Movement beyond the movement range ... 238
8.4.2.1 Behavior for operating mode Jog ... 238
8.4.2.2 Behavior for operating mode Profile Position ... 239
8.4.3 Setting a modulo range ... 240
8.4.3.1 Parameterization ... 241
8.4.3.2 Examples with relative movements ... 244
8.4.3.3 Examples with absolute movements and "Shortest Distance" ... 245
8.4.3.4 Examples with absolute movements and "Positive Direction" ... 246
8.4.3.5 Examples with absolute movements and "Negative Direction" ... 247

8.5 Extended settings ... 248
8.5.1 Scaling ... 248
8.5.1.1 Configuration of position scaling ... 249
8.5.1.2 Configuration of velocity scaling ... 250
8.5.1.3 Configuration of ramp scaling ... 251
8.5.2 Setting the digital signal inputs and signal outputs ... 252
8.5.2.1 Parameterization of the signal input functions ... 253
8.5.2.2 Parameterization of the signal output functions ... 258
8.5.2.3 Parameterization of software debouncing ... 261
8.5.3 Setting backlash compensation ... 262
8.5.4 Setting the motion profile for the velocity ... 264
8.5.5 Setting the controller parameters ... 266
8.5.5.1 Overview of the controller structure ... 266
8.5.5.2 Overview of position controller ... 267
8.5.5.3 Overview of velocity controller ... 268
8.5.5.4 Overview of current controller ... 269
8.5.5.5 Parameterizable controller parameters ... 270
8.5.5.6 Selecting a controller parameter set ... 271
8.5.5.7 Automatically switching between control parameter sets ... 272
8.5.5.8 Copying a controller parameter set ... 276
8.5.5.9 Deactivating the integral term ... 276
8.5.5.10 Controller parameter set 1 ... 277
8.5.5.11 Controller parameter set 2 ... 280

0198441113956, V1.00, 07.2013

8.5.6 Settings of parameter _DCOMstatus ... 283

8.6 Functions for target value processing ... 284
8.6.1 Stop movement with Halt ... 284
8.6.2 Stopping a movement with Quick Stop ... 286
8.6.3 Limitation of the velocity via signal inputs ... 289
8.6.4 Limitation of the current via signal inputs ... 290
8.6.5 Jerk limitation ... 291
8.6.6 Zero Clamp ... 292
8.6.7 Setting a signal output via parameter ... 293
8.6.8 Starting a movement via a signal input ... 293
8.6.9 Position capture via signal input ... 294
8.6.10 Relative Movement After Capture (RMAC) ... 297

8.7 Functions for monitoring movements ... 300
8.7.1 Limit switches ... 300
8.7.2 Reference switch ... 302
8.7.3 Software limit switches ... 303
8.7.4 Load-dependent position deviation (following error) ... 305
8.7.5 Motor standstill and direction of movement ... 308
8.7.6 Torque window ... 309
8.7.7 Velocity window ... 310
8.7.8 Standstill window ... 311
8.7.9 Position register ... 313
8.7.10 Position deviation window ... 318
8.7.11 Velocity deviation window ... 320
8.7.12 Velocity threshold value ... 322
8.7.13 Current threshold value ... 324

8.8 Functions for monitoring internal device signals ... 326
8.8.1 Temperature monitoring ... 326
8.8.2 Monitoring load and overload (I^2t monitoring) ... 327
8.8.3 Commutation monitoring ... 329
8.8.4 Monitoring of mains phases ... 330
8.8.5 Ground fault monitoring ... 332

9 Examples ... 333

10 Diagnostics and troubleshooting ... 339

10.1 Diagnostics via LEDs ... 340
10.1.1 Fieldbus status LEDs ... 341
10.1.2 Operating state LEDs ... 343
10.1.3 Memory card LEDs ... 344
10.1.4 DC bus LED ... 345

10.2 Diagnostics via signal outputs ... 346

10.3 Diagnostics via the fieldbus ... 347
10.3.1 EtherCAT state machine ... 350

10.4 Warnings and errors ... 352
10.4.1 Indicating warnings and errors via the commissioning software ... 353
10.4.2 Indicating warnings and errors via the signal outputs ... 353
10.4.3 Indicating warnings and errors via the fieldbus ... 354
10.4.3.1 Last warning and last error ... 354
10.4.3.2 Error memory ... 355

0198441113956, V1.00, 07.2013

10.5 Table of warnings and errors by range ... 359

11 Parameters ... 383

11.1 Representation of the parameters ... 384
11.1.1 Decimal numbers for fieldbus ... 385

11.2 List of parameters ... 386

12 Accessories and spare parts ... 467

12.1 Commissioning tools ... 467

12.2 Mains supply for slot 1 or slot 2 ... 467

12.3 Braking resistors for slot 1 or slot 2 ... 467

12.4 External braking resistors ... 468

12.5 I/O module with industrial connector for logic type 1 (source) ... 468

12.6 I/O module with industrial connector for logic type 2 (sink) ... 469

12.7 I/O module with spring terminals ... 469

12.8 Memory cards ... 469

12.9 Cables for safety function STO ... 470

12.10 Industrial plug connectors ... 470

12.11 EtherCAT cables with connectors ... 470

13 Service, maintenance and disposal ... 471

13.1 Service address ... 471

13.2 Maintenance ... 471
13.2.1 Lifetime safety function STO ... 472

13.3 Replacing the product ... 474

13.4 Shipping, storage, disposal ... 475

14 Glossary ... 477

14.1 Units and conversion tables ... 477
14.1.1 Length ... 477
14.1.2 Mass ... 477
14.1.3 Force ... 477
14.1.4 Power ... 477
14.1.5 Rotation ... 478
14.1.6 Torque ... 478
14.1.7 Moment of inertia ... 478
14.1.8 Temperature ... 478
14.1.9 Conductor cross section ... 478

14.2 Terms and Abbreviations ... 479

15 Index ... 481

0198441113956, V1.00, 07.2013

0198441113956, V1.00, 07.2013

About the book

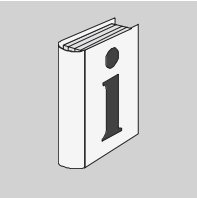

This manual is valid for LXM32iECT standard products. Chapter "1 Introduction" lists the type code for this product. The type code allows you to identify whether your product is a standard product or a customized version.

Source manuals

The latest versions of the manuals can be downloaded from the Internet at:

http://www.schneider-electric.com

Source CAD data

For easier engineering, CAD data (drawings or EPLAN macros) are available for download from the Internet at:

http://www.schneider-electric.com

Corrections and suggestions

We always try to further optimize our manuals. We welcome your suggestions and corrections.

Please get in touch with us by e-mail:
techcomm@schneider-electric.com.

Work steps

If work steps must be performed consecutively, this sequence of steps is represented as follows:

- ■ Special prerequisites for the following work steps
- ▶ Step 1
- ◁ Specific response to this work step
- ▶ Step 2

If a response to a work step is indicated, this allows you to verify that the work step has been performed correctly.

Unless otherwise stated, the individual steps must be performed in the specified sequence.

Making work easier

Information on making work easier is highlighted by this symbol:

Sections highlighted this way provide supplementary information on making work easier.

Parameters

In text sections, parameters are shown with the parameter name, for example `_IO_act`. The way parameters are represented in tables is explained in the chapter Parameters. The parameter list is sorted alphabetically by parameter name.

SI units

Technical data are specified in SI units. Converted units are shown in brackets behind the SI unit; they may be rounded.

Example:
Minimum conductor cross section: 1.5 mm^2 (AWG 14)

Inverted signals

Inverted signals are represented by an overline, for example $\overline{\texttt{STO_A}}$ or $\overline{\texttt{STO_B}}$.

Wiring examples

Note that most of the wiring examples show the logic type 1.

0198441113956, V1.00, 07.2013

Glossary	Explanations of special technical terms and abbreviations.
Index	List of keywords with references to the corresponding page numbers.

Further reading

Recommended literature for further reading:

- Ellis, George: Control System Design Guide. Academic Press
- Kuo, Benjamin; Golnaraghi, Farid: Automatic Control Systems. John Wiley & Sons

User Association

EtherCAT Technology Group (ETG)

http://www.ethercat.org

0198441113956, V1.00, 07.2013

1 Introduction

1

1.1 Device overview

The modular components of the product family Lexium 32i can be combined to meet the requirements of a great variety of applications. Minimum wiring as well as a comprehensive portfolio of options and accessories allow you to implement compact, high-performance drive solutions for a wide range of power requirements.

Overview of some of the features:

- Communication interface for EtherCAT; the reference values for numerous operating modes are supplied via this interface.
- The product is commissioned via a PC with commissioning software or the fieldbus.
- Memory cards allow for copying of parameters and fast device replacement.
- The safety function "Safe Torque Off" (STO) as per IEC 61800-5-2 is implemented on board.

EtherCAT is an Ethernet-based fieldbus system. The technology is standardized as per the international standards IEC 61158 and IEC 61784 as well as ISO 15745-4.

EtherCAT is a real-time Ethernet system that lends itself for use in cycle-synchronous motion control applications.

EtherCAT® is a registered trademark and patented technology, licenced by Beckhoff Automation GmbH, Germany.

0198441113956, V1.00, 07.2013

LXM32i The product can comprise the following components:

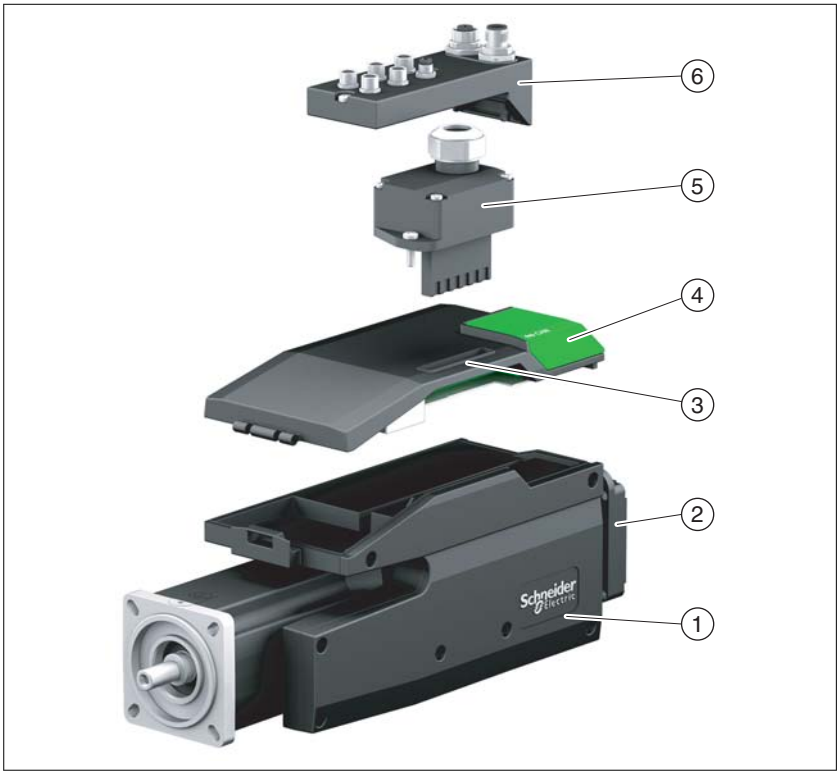

Figure 1: Components LXM32 Integrated

(1) BMi servomotor with integrated power stage
(2) Standard braking resistor
(3) LXM32i control unit for EtherCAT fieldbus
(4) Cover of commissioning interface
(5) Connection module for mains supply
(6) I/O module / connection module for fieldbus, inputs/outputs and safety function STO
Versions with spring terminals or industrial connector
(7) Connection module for external braking resistor

0198441113956, V1.00, 07.2013

1.2 Type code

LXM	32i	ECT

Product family
LXM = Lexium

Product type
32i = Control unit for Lexium 32i

Interfaces
ECT = Fieldbus EtherCAT

BMi	070	2	P	0	6	A

Product family
BMi = Servo motor for Lexium 32i

Size (housing)
070 = 70 mm flange
100 = 100 mm flange

Length
2 = 2 stacks
3 = 3 stacks

Winding
P = 3 ~ (208 V / 400 V / 480 V)
T = 1 ~ (115 V / 230 V)

Shaft and degree of protection
0 = Smooth shaft; degree of protection: shaft IP54 1), housing IP65
1 = Parallel key; degree of protection: shaft IP 54 1), housing IP 65
2 = Smooth shaft; degree of protection: shaft and housing IP65 1) 2)
3 = Parallel key; degree of protection: shaft and housing IP 65 1) 2)

Encoder system
1 = Absolute singleturn 128 Sin/Cos periods per revolution (SKS36)
2 = Absolute multiturn 128 Sin/Cos periods per revolution (SKM36)
6 = Absolute singleturn 16 Sin/Cos periods per revolution (SEK37)
7 = Absolute multiturn 16 Sin/Cos periods per revolution (SEL37)

Holding brake
A = Without holding brake
F = With holding brake

1) In the case of mounting position IM V3 (drive shaft vertical, shaft end up), the motor only has degree of protection IP50.
2) The maximum permissible speed of rotation is limited to 3000 min^{-1} by the shaft sealing ring.

Modules
See chapter "12 Accessories and spare parts" for a list of the modules.

If you have questions concerning the type code, contact your Schneider Electric sales office. Contact your machine vendor if you have questions concerning customized versions.

Customized version: Position 12 of the type code is an "S". The subsequent number defines the customized version. Example: LXM32i••••S123

The device designation is shown on the nameplate.

0198441113956, V1.00, 07.2013

0198441113956, V1.00, 07.2013

2 Before you begin - safety information

2

2.1 Qualification of personnel

Only appropriately trained persons who are familiar with and understand the contents of this manual and all other pertinent product documentation are authorized to work on and with this product. In addition, these persons must have received safety training to recognize and avoid hazards involved. These persons must have sufficient technical training, knowledge and experience and be able to foresee and detect potential hazards that may be caused by using the product, by changing the settings and by the mechanical, electrical and electronic equipment of the entire system in which the product is used.

All persons working on and with the product must be fully familiar with all applicable standards, directives, and accident prevention regulations when performing such work.

2.2 Intended use

This product is a motor with an integrated drive and intended for industrial use according to this manual.

The product may only be used in compliance with all applicable safety regulations and directives, the specified requirements and the technical data.

Prior to using the product, you must perform a risk assessment in view of the planned application. Based on the results, the appropriate safety measures must be implemented.

Since the product is used as a component in an entire system, you must ensure the safety of persons by means of the design of this entire system (for example, machine design).

Operate the product only with the specified cables and accessories. Use only genuine accessories and spare parts.

The product must NEVER be operated in explosive atmospheres (hazardous locations, Ex areas).

Any use other than the use explicitly permitted is prohibited and can result in hazards.

Electrical equipment should be installed, operated, serviced, and maintained only by qualified personnel.

0198441113956, V1.00, 07.2013

2.3 Hazard categories

Safety instructions to the user are highlighted by safety alert symbols in the manual. In addition, labels with symbols and/or instructions are attached to the product that alert you to potential hazards.

Depending on the seriousness of the hazard, the safety instructions are divided into 4 hazard categories.

⚠ DANGER

DANGER indicates an imminently hazardous situation, which, if not avoided, **will result** in death or serious injury.

⚠ WARNING

WARNING indicates a potentially hazardous situation, which, if not avoided, **can result** in death, serious injury, or equipment damage.

⚠ CAUTION

CAUTION indicates a potentially hazardous situation, which, if not avoided, **can result** in injury or equipment damage.

NOTICE

NOTICE indicates a potentially hazardous situation, which, if not avoided, **can result** in equipment damage.

0198441113956, V1.00, 07.2013

2.4 Basic information

⚠ ⚠ DANGER

HAZARD DUE TO ELECTRIC SHOCK, EXPLOSION OR ARC FLASH

- Only appropriately trained persons who are familiar with and understand the contents of this manual and all other pertinent product documentation and who have received safety training to recognize and avoid hazards involved are authorized to work on and with this drive system. Installation, adjustment, repair and maintenance must be performed by qualified personnel.
- The system integrator is responsible for compliance with all local and national electrical code requirements as well as all other applicable regulations with respect to grounding of all equipment.
- Many components of the product, including the printed circuit board, operate with mains voltage. Do not touch. Use only electrically insulated tools.
- Do not touch unshielded components or terminals with voltage present.
- The motor generates voltage when the shaft is rotated. Prior to performing any type of work on the drive system, block the motor shaft to keep external driving forces from rotating the shaft.
- Before performing work on the drive system:
  - Disconnect all power, including external control power that may be present.
  - Place a "Do Not Turn On" label on all power switches.
  - Lock all power switches in the open position.
  - **Wait 15 minutes** to allow the DC bus capacitors to discharge. The DC bus LED is not an indicator of the absence of DC bus voltage.
- Install connectors and covers before applying voltage.

Failure to follow these instructions will result in death or serious injury.

⚠ WARNING

UNEXPECTED MOVEMENT

Drive systems may perform unexpected movements because of incorrect wiring, incorrect settings, incorrect data or other errors.

- Carefully install the wiring in accordance with the EMC requirements.
- Do not operate the product with unknown settings or data.
- Perform a comprehensive commissioning test.

Failure to follow these instructions can result in death or serious injury.

0198441113956, V1.00, 07.2013

⚠ WARNING

MOVEMENT WITHOUT BRAKING EFFECT

If power outage, functions or errors cause the power stage to be switched off, the motor is no longer decelerated in a controlled way.

- Secure the hazardous area so it cannot be accessed.
- If necessary, use a cushioned mechanical stop or a suitable brake.

Failure to follow these instructions can result in death, serious injury or equipment damage.

⚠ WARNING

LOSS OF CONTROL

- The designer of any control scheme must consider the potential failure modes of control paths and, for certain critical functions, provide a means to achieve a safe state during and after a path failure. Examples of critical control functions are emergency stop, overtravel stop, power outage and restart.
- Separate or redundant control paths must be provided for critical functions.
- System control paths may include communication links. Consideration must be given to the implication of unanticipated transmission delays or failures of the link.
- Observe all accident prevention regulations and local safety guidelines. [1)]
- Each implementation of the product must be individually and thoroughly tested for proper operation before being placed into service.

Failure to follow these instructions can result in death or serious injury.

1) For USA: Additional information, refer to NEMA ICS 1.1 (latest edition), “Safety Guidelines for the Application, Installation, and Maintenance of Solid State Control” and to NEMA ICS 7.1 (latest edition), “Safety Standards for Construction and Guide for Selection, Installation and Operation of Adjustable-Speed Drive Systems”.

2.5 Functional safety

Using the safety functions integrated in this product requires careful planning. See chapter "5.9 Safety function STO ("Safe Torque Off")", page 69 for additional information.

0198441113956, V1.00, 07.2013

2.6 Standards and terminology

Technical terms, terminology and the corresponding descriptions in this manual are intended to use the terms or definitions of the pertinent standards.

In the area of drive systems, this includes, but is not limited to, terms such as "safety function", "safe state", "fault", "fault reset", "failure", "error", "error message", "warning", "warning message", etc.

Among others, these standards include:

- IEC 61800 series: "Adjustable speed electrical power drive systems"
- IEC 61158 series: "Digital data communications for measurement and control – Fieldbus for use in industrial control systems"
- IEC 61784 series: "Industrial communication networks – Profiles"
- IEC 61508 series: "Functional safety of electrical/electronic/programmable electronic safety-related systems"

Also see the glossary at the end of this manual.

0198441113956, V1.00, 07.2013

3 Technical Data

3

The products are intended for industrial use and may only be operated with a permanently installed connection.

This chapter contains information on the ambient conditions and on the mechanical and electrical properties of the product family and the accessories.

Subject	Page
"3.1 Ambient conditions"	24
"3.2 Dimensional drawings"	26
"3.3 General features"	28
"3.4 Signals"	30
"3.5 Functional safetyFunctional safety"	32
"3.6 Motor and power stage"	33
"3.7 Braking resistorBraking resistor"	42
"3.8 Internal mains filter"	44
"3.9 Tightening torque and screws"	45
"3.10 Conditions for UL 508C"	46
"3.11 Certifications"	46
"3.12 Declaration of conformity"	47
"3.13 TÜV certificate for functional safety"	50

0198441113956, V1.00, 07.2013

3.1 Ambient conditions

3.1.1 Ambient conditions for transportation and storage

Climatic environmental conditions transportation and storage

The environment during transportation and storage must be dry and free from dust.

Temperature	[°C]	-25 ... 70

The following relative humidity is permissible during transportation and storage:

Relative humidity (non-condensing)	[%]	<95

Vibration and shock

Vibration and shock during transportation and storage		As per IEC 60721-3-2, class 2M2

3.1.2 Ambient conditions operation

Climatic environmental conditions operation

The maximum permissible ambient temperature during operation depends on the mounting distances between the devices and on the required power. Observe the pertinent instructions in the chapter "6 Installation".

Ambient temperature without derating (no icing, non-condensing)	[°C]	0 ... 40
Ambient temperature if all of the following conditions are met [1]: • Derating (torque) by 4% per Kelvin [2] • Maximum installation altitude 1000 m above m.s.l.	[°C]	41 ... 65

1) Usage as per UL 508C requires compliance with the information provided in chapter "3.10 Conditions for UL 508C".
2) See " Example of derating at 50 °C"

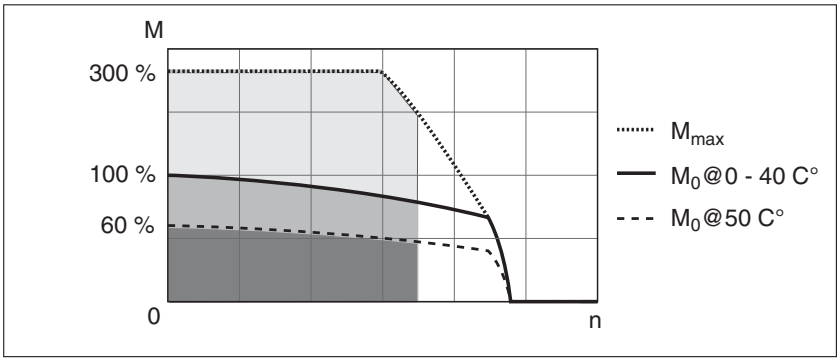

Figure 2: Example of derating at 50 °C

The following relative humidity is permissible during operation:

0198441113956, V1.00, 07.2013

Relative humidity (non-condensing)	[%]	5 ... 95

The installation altitude is defined as altitude above mean sea level.

Installation altitude without derating	[m]	<1000
Installation altitude if all of the following conditions are met: • 45 °C maximum ambient temperature • Reduction of the continuous power by 1% per 100 m above 1000 m	[m]	1000 ... 2000
Installation altitude above mean sea level if all of the following conditions are met: • 40 °C maximum ambient temperature • Reduction of the continuous power by 1% per 100 m above 1000 m • Overvoltages of the supply mains limited to overvoltage category II as per IEC 60664-1 • No IT mains	[m]	2000 ... 3000

Degree of protection

The requires all parts to be correctly mounted, see chapter "6 Installation", and the cover of the commissioning interface to be closed (IP as per IEC 60529):

Degree of protection	IP 54 1)
Degree of protection of motors with shaft sealing ring	IP 65 1) 2)

1) In the case of mounting position IM V3 (drive shaft vertical, shaft end upward), the motor only has degree of protection IP 50. The degree of protection only relates to the motor itself, not to mounted components such as, for example, a gearbox.
2) With shaft sealing ring: the maximum speed of rotation is limited to 6000 min^{-1}; shaft sealing ring with initial lubrication, if the seals run dry, this increases friction and reduces the service life

Vibration and shock

Vibration and shock during operation		As per IEC 60721-3-3 Class 3M4

0198441113956, V1.00, 07.2013

3.2 Dimensional drawings

Dimensions BMi070

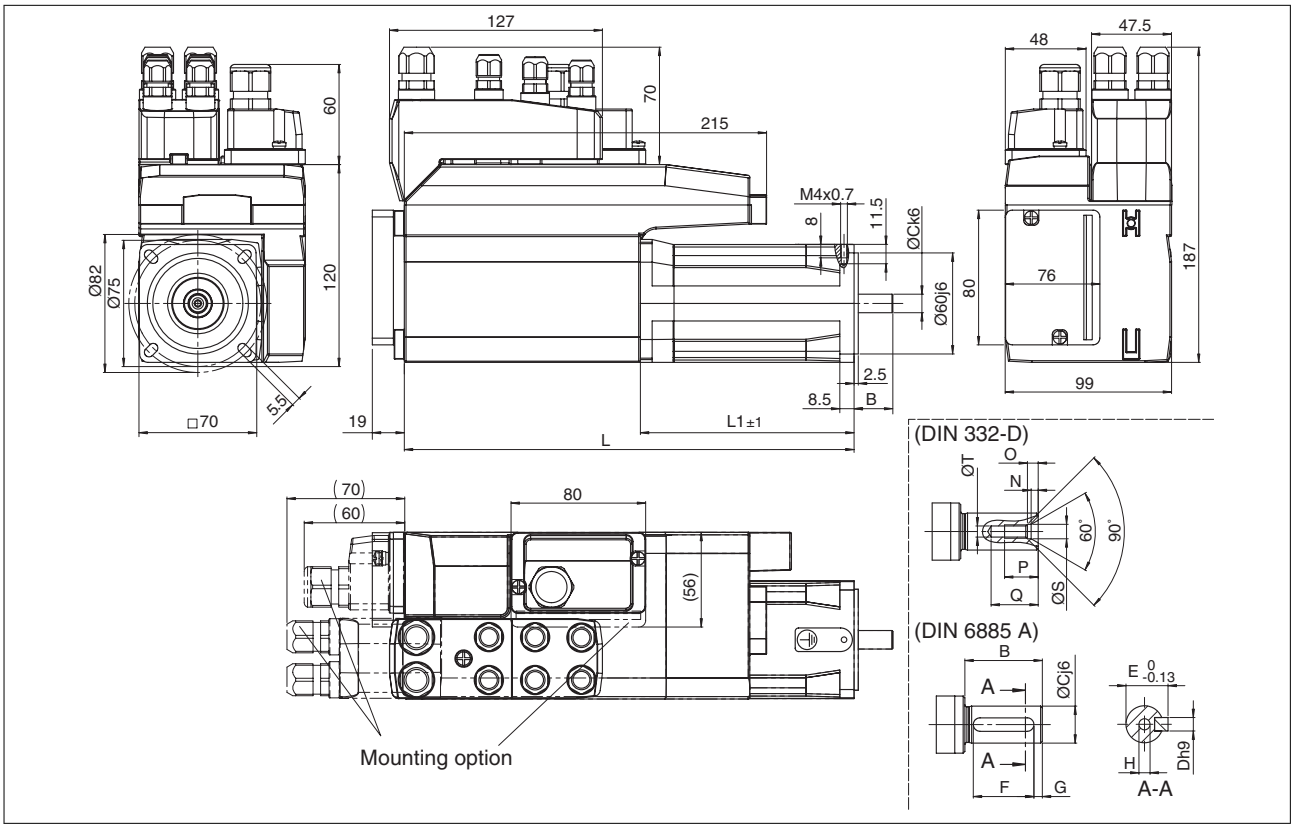

Figure 3: Dimensional drawing BMi070

BMi		**0702**	**0703**
L without holding brake	[mm]	268	300
L with holding brake	[mm]	306	339
L1 without holding brake	[mm]	127	159
L1 with holding brake	[mm]	166	198
B	[mm]	23	30
C	[mm]	11	14
D	[mm]	4	5
E	[mm]	12.5	16
F	[mm]	18	20
G	[mm]	2.5	5
H	[mm]	M4	M5
T	[mm]	3.3	4.2
S	[mm]	4.3	5.3
Q	[mm]	14	17
P	[mm]	10	12.5
O	[mm]	3.2	4
N	[mm]	2.1	2.4

The controls must be accessible.

0198441113956, V1.00, 07.2013

Dimensions BMi100

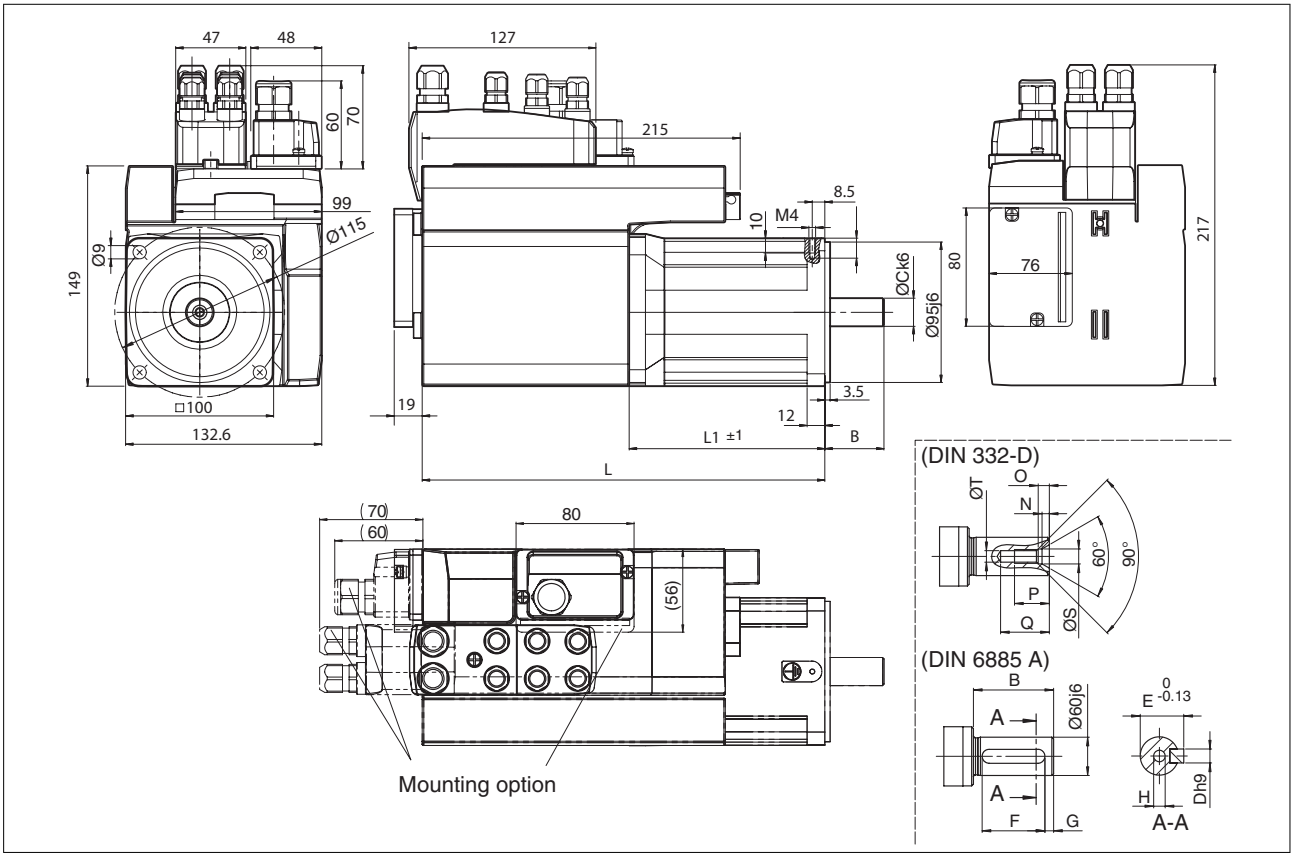

Figure 4: Dimensional drawing BMi100

BMi		1002	1003
L without holding brake	[mm]	273	299
L with holding brake	[mm]	316	346
L1 without holding brake	[mm]	133	159
L1 with holding brake	[mm]	176	206
B	[mm]	40	40
C	[mm]	19	19
D	[mm]	6	6
E	[mm]	21.5	21.5
F	[mm]	30	30
G	[mm]	5	5
H	[mm]	M6	M6
T	[mm]	5	5
S	[mm]	6.4	6.4
Q	[mm]	21	21
P	[mm]	16	16
O	[mm]	5	5
N	[mm]	2.8	2.8

The controls must be accessible.

0198441113956, V1.00, 07.2013

3.3 General features

Number of pairs of poles	5	
Thermal class	F (155 C°)	As per IEC 60034-1
Vibration grade	A	As per IEC 60034-14
Shaft extension run-out / perpendicularity	Class N (normal class)	As per IEC 60072-1, DIN 42955
Housing color	Black RAL 9005	

Mains voltage: range and tolerance

115/230 [V_{ac}] single-phase	[V_{ac}]	100 -15% ... 120 +10% 200 -15% ... 240 +10%
208/400/480 [V_{ac}] three-phase	[V_{ac}]	200 -15% ... 240 +10% 380 -15% ... 480 +10%
Frequency	[Hz]	50 -5% ... 60 +5%

Transient overvoltages		Overvoltage category III [1)]
Rated voltage to ground	[V_{ac}]	300

1) Depends on installation altitude, see chapter "3.1 Ambient conditions".

Type of mains (type of grounding)

TT mains, TN mains	Permissible
IT mains	Permissible [1)]
Mains with grounded line conductor	Not permitted

1) Depending on the installation altitude, see chapter "3.1 Ambient conditions".

Leakage current

Leakage current (as per IEC 60990, figure 3)	[mA]	<30 [1)]

1) Measured on mains with grounded neutral point, without external mains filter. If residual current devices are used, note that a 30mA residual current device can trigger at values as low as 15mA. In addition, there is a high-frequency leakage current which is not considered in the measurement. Residual current devices respond differently to this.

Harmonic currents and impedance

The harmonic currents depend on the impedance of the supply mains. This is expressed in terms of the short-circuit current of the supply mains. If the supply mains has a higher short-circuit current than indicated in the Technical Data for the device, use upstream mains reactors.

Monitoring the continuous output current

The continuous output current is monitored by the device. If the continuous output current is permanently exceeded, the device reduces the output current. The continuous output current can flow if the ambient temperature is below 50°C and if the internal braking resistor does not generate heat.

Monitoring the continuous output power

The continuous output power is monitored by the device. If the continuous output power is exceeded, the device reduces the output current.

Peak output current for 5 second

The device can provide the peak output current for 5 seconds. If the peak output current flows when the motor is at a standstill, the higher load on a single semiconductor switch causes the current limitation to become active earlier than when the motor moves.

0198441113956, V1.00, 07.2013

PWM frequency power stage

The PWM frequency of the power stage is set to a fixed value.

PWM frequency power stage	[kHz]	8

Service life

Nominal bearing service life L_{10h} 1)	h	20000

1) Operating hours at a probability of failure of 10%

The service life of the motors when operated correctly is limited primarily by the service life of the rolling bearing.

The following operating conditions significantly reduce the service life:

- Installation altitude >1000 m above m.s.l.
- Rotary movements exclusively within a fixed angle of <100°
- Operation under vibration load >20 m/s^2
- Allowing sealing rings to run dry
- Contact of the seals with aggressive media

Shaft sealing ring / degree of protection

The motors can be equipped with an optional shaft sealing ring. With a shaft sealing ring, they have degree of protection IP65. The shaft sealing ring limits the maximum speed of rotation to 6000 min^{-1}.

Note the following:

- The shaft sealing ring is factory-pre-lubricated.
- If the seals run dry, this increases friction and greatly reduces the service life of the sealing rings.

0198441113956, V1.00, 07.2013

3.4 Signals

Logic type

Observe the information concerning the logic type in chapter "5.10 Logic type".

In the case of industrial connectors, the logic type is determined with the selection of the connection module. If the connection module with spring terminals is used, the logic type for the inputs and the outputs can also be wired differently.

Internal 24V signal power supply

The internal 24 V signal power supply is short-circuit protected and meets the PELV requirements.

Nominal voltage	[V_{dc}]	24
Voltage range	[V_{dc}]	23 ... 28
Maximum current `+24VDC`	[mA]	200
Residual ripple		<5%

The reference potential `0VDC` is grounded internally, see IEC 60204-1 (ground faults).

Do not ground the internal supply voltage outside the device to avoid ground loops.

The short circuit protection can be reset by switching off the supply voltage.

External 24 V signal power supply

Signals can be supplied with voltage either by means of an external power supply unit or the internal signal power supply (see internal 24 V signal power supply). The voltage must meet the requirements of IEC 61131-2 (PELV standard power supply unit):

Voltage	[V_{dc}]	24 V -15% / +20%
Residual ripple		<5%

Digital input signals 24 V

Signal inputs are protected against reverse polarity, outputs are short-circuit protected. The inputs and outputs are galvanically isolated.

When wired as logic type 1, the levels of the opto-isolated inputs DI• comply with IEC 61131-2, type 1.

Level 0 with logic type 1 (U_{low})	[V_{dc}]	-3 ... +5
Level 1 with logic type 1 (U_{high})	[V_{dc}]	+15 ... +30
Input current (typical)	[mA]	2.5
Debounce time [1)]	[ms]	1.5

1) Adjustable via parameter (sampling period 250µs)

0198441113956, V1.00, 07.2013

24 V output signals

The levels of the digital 24 V output signals comply with IEC 61131-2.

Output voltage	[V]	≤30
Maximum switching current	[mA]	≤100
Maximum current per output	[mA]	100
Maximum total current	[mA]	200
Suitable for inductive loads	[mH]	1000
Voltage drop at 50 mA load	[V_{dc}]	≤1

The short circuit protection can be reset by switching off the supply voltage.

Capture input signals 24 V

When wired as "logic type 1", the levels of the opto-isolated inputs Cap• comply with IEC 61131-2, type 1.

Level 0 with logic type 1 (U_{low})	[V_{dc}]	-3 ... +5
Level 1 with logic type 1 (U_{high})	[V_{dc}]	+15 ... +30
Input current (typical)	[mA]	2.5
Debounce time `CAP1` and `CAP2`	[µs]	2
Jitter `CAP1` and `CAP2`	[µs]	<2

Input signals safety function STO

0 level [1)] (U_{low})	[V_{dc}]	-3 ... +5
1 level [1)] (U_{high})	[V_{dc}]	+15 ... +30
Input current (typical)	[mA]	2.5
Debounce time $\overline{\texttt{STO_A}}$ and $\overline{\texttt{STO_B}}$	[ms]	>1
Detection of signal differences between $\overline{\texttt{STO_A}}$ and $\overline{\texttt{STO_B}}$	[s]	>1
Response time of safety function STO	[ms]	≤10

1) The inputs for the safety function STO are permanently set to logic type 1 (for source outputs. Observe the information provided in chapter "5.9 Safety function STO ("Safe Torque Off")".

0198441113956, V1.00, 07.2013

EtherCAT signals

The EtherCAT signals comply with the IEEE 802.3 standard and are galvanically isolated.

Fieldbus protocol	EtherCAT
Transmission rate	100 Mbit/s
Status indication	2 x LED Link/Activity 1 x LED Network RUN 1 x LED Network ERROR
Addressing methods	Position addressing Node addressing Logical addressing Second address
Communication profile	CoE
Synchronization methods	DC synchronous (Distributed Clock, Jitter <1 µs) SM synchronous (SyncManager)
Communication cycle time	0,25 ms ... 20 ms (0.25 ms increments)
Input shift time	0 ms ... x (0.25 ms increments) x = Set communication cycle time minus 0.25 ms

3.5 Functional safety

Data for maintenance plan and safety calculations

The safety function must be requested and tested at regular intervals. The interval depends on the hazard and risk analysis of the total system. The minimum interval is 1 year (high demand mode as per IEC 61508).

Use the following data of the safety function STO for your maintenance plan and the safety calculations:

Lifetime of the safety function STO (IEC 61508) [1]	Years	20
SFF (IEC 61508) Safe Failure Fraction	[%]	90
HFT (IEC 61508) Hardware Fault Tolerance Type A subsystem		1
Safety integrity level IEC 61508 IEC 62061		 SIL3 SILCL3
PFH (IEC 61508) Probability of Dangerous Hardware Failure per Hour	[1/h] (FIT)	$4*10^{-9}$ (4)
PL (ISO 13849-1) Performance Level		e (category 3)
$MTTF_d$ (ISO 13849-1) Mean Time to Dangerous Failure	Years	100 (nominal 350)
DC (ISO 13849-1) Diagnostic Coverage	[%]	90

1) See chapter "13.2.1 Lifetime safety function STO".

Contact your local sales office for additional data, if required.

0198441113956, V1.00, 07.2013

3.6 Motor and power stage

3.6.1 Motor-specific data

3.6.1.1 BMi 115V_{ac} single-phase

			BMi0702	BMi0703	BMi1002
Winding			**T**	**T**	**T**
Continuous stall torque [1]	M_0 [2]	[Nm]	2.24	2.88	5.07
Peak torque	M_{max}	[Nm]	4.84	6.3	12.39
Torque constant [3]	k_t	[Nm/A]	0.67	0.87	0.91
Nominal speed of rotation	n_N	[min^{-1}]	1900	1400	1400
Nominal torque	M_N	[Nm]	2.21	2.85	5.01
Nominal power [4]	P_N	[kW]	0.44	0.418	0.735
Nominal current motor	I_N	[A_{rms}]	3.55	3.55	5.70
Maximum current motor	I_{max}	[A_{rms}]	8.00	8.00	15.00
Technical data - electrical					
Input current at nominal power and nominal voltage)		[A_{rms}]	6.99	6.99	12.88
Inrush current limitation		[A]	7.5	7.5	7.5
Maximum inrush current [5]		[A]	146	146	209
Time for maximum inrush current		[ms]	1.12	1.12	1.52
Total harmonic distortion THD of the input current)		[%]	150.58	150.58	134.52
Short-circuit current rating (SCCR)		[kA]	1	1	1
Maximum fuse to be connected upstream [6]		[A]	25	25	25
Technical data - mechanical					
Maximum permissible speed of rotation	n_{max}	[min^{-1}]	7000	5500	5000
Rotor inertia without brake	J_M	[$kgcm^2$]	1.13	1.67	6.28
Rotor inertia with brake	J_M	[$kgcm^2$]	1.24	1.78	6.77
Mass with standard braking resistor without holding brake	m	[kg]	4.00	4.75	8.10
Mass with standard braking resistor with holding brake	m	[kg]	4.50	5.30	8.80
LXM32i control unit	m	[kg]	0.50	0.50	0.50

1) Conditions for performance data: Mounted to steel plate (2.5 x flange size)^2 area, 10 mm thickness, centered hole.
2) M_0=Continuous stall torque at low speed of rotation and 100% duty cycle; at speeds of rotation of < 20 min^{-1} the continuous stall torque is reduced to 87%
3) At n = 20 min^{-1} and maximum operating temperature
4) At a mains impedance corresponding to a short-circuit current of the supply mains of 1 kA
5) Extreme case, off/on pulse before the inrush current limitation responds, see next line for maximum time
6) Fuses: Circuit breakers with B or C characteristic; see "3.10 Conditions for UL 508C" for UL. Lower ratings are permissible. The fuse must be rated in such a way that the fuse does not trip at the specified input current.

0198441113956, V1.00, 07.2013

3.6.1.2 BMi 230V_{ac} single-phase

			BMi0702	BMi0703	BMi1002
Winding			**T**	**T**	**T**
Continuous stall torque [1]	M_0 [2]	[Nm]	2.16	2.78	4.75
Peak torque	M_{max}	[Nm]	6.18	8.10	14.43
Torque constant [3]	k_t	[Nm/A]	0.67	0.87	0.91
Nominal speed of rotation	n_N	[min^{-1}]	4000	3100	3000
Nominal torque	M_N	[Nm]	1.74	2.25	3.99
Nominal power [4]	P_N	[kW]	0.73	0.73	1.25
Nominal current motor	I_N	[A_{rms}]	2.83	2.82	4.59
Maximum current motor	I_{max}	[A_{rms}]	10.50	10.50	18.00
Technical data - electrical					
Input current at nominal power and nominal voltage)		[A_{rms}]	6.12	6.12	11.19
Inrush current limitation		[A]	7.5	7.5	7.5
Maximum inrush current [5]		[A]	201	201	274
Time for maximum inrush current		[ms]	1.66	1.66	2.24
Total harmonic distortion THD of the input current)		[%]	157.75	157.75	137.82
Short-circuit current rating (SCCR)		[kA]	1	1	1
Maximum fuse to be connected upstream [6]		[A]	25	25	25
Technical data - mechanical					
Maximum permissible speed of rotation	n_{max}	[min^{-1}]	7000	5500	5000
Rotor inertia without brake	J_M	[$kgcm^2$]	1.13	1.67	6.28
Rotor inertia with brake	J_M	[$kgcm^2$]	1.24	1.78	6.77
Mass with standard braking resistor without holding brake	m	[kg]	4.00	4.75	8.10
Mass with standard braking resistor with holding brake	m	[kg]	4.50	5.30	8.80
LXM32i control unit	m	[kg]	0.50	0.50	0.50

1) Conditions for performance data: Mounted to steel plate (2.5 x flange size)^2 area, 10 mm thickness, centered hole.
2) M_0=Continuous stall torque at low speed of rotation and 100% duty cycle; at speeds of rotation of < 20 min^{-1} the continuous stall torque is reduced to 87%
3) At n = 20 min^{-1} and maximum operating temperature
4) At a mains impedance corresponding to a short-circuit current of the supply mains of 1 kA
5) Extreme case, off/on pulse before the inrush current limitation responds, see next line for maximum time
6) Fuses: Circuit breakers with B or C characteristic; see "3.10 Conditions for UL 508C" for UL. Lower ratings are permissible. The fuse must be rated in such a way that the fuse does not trip at the specified input current.

0198441113956, V1.00, 07.2013

3.6.1.3 BMi 208V_{ac} three-phase

			BMi0702	BMi0703	BMi1002	BMi1003
Winding			**P**	**P**	**P**	**P**
Continuous stall torque [1]	M_0 [2]	[Nm]	2.24	2.96	4.99	7.31
Peak torque	M_{max}	[Nm]	6.42	8.06	13.92	18.87
Torque constant [3]	k_t	[Nm/A]	1.24	1.52	1.32	1.79
Nominal speed of rotation	n_N	[min^{-1}]	1800	1600	1900	1500
Nominal torque	M_N	[Nm]	2.21	2.93	4.91	7.22
Nominal power [4]	P_N	[kW]	0.42	0.49	0.98	1.13
Nominal current motor	I_N	[A_{rms}]	1.95	2.1	3.90	4.30
Maximum current motor	I_{max}	[A_{rms}]	6.00	6.00	12.00	12.00
Technical data - electrical						
Input current at nominal power and nominal voltage)		[A_{rms}]	2.42	2.63	5.35	5.82
Inrush current limitation		[A]	7.5	7.5	7.5	7.5
Maximum inrush current [5]		[A]	71	71	111	111
Time for maximum inrush current		[ms]	0.5	0.50	0.64	0.64
Total harmonic distortion THD of the input current)		[%]	148.31	143.46	148.31	144.98
Short-circuit current rating (SCCR)		[kA]	5	5	5	5
Maximum fuse to be connected upstream [6]		[A]	25	25	25	25
Technical data - mechanical						
Maximum permissible speed of rotation	n_{max}	[min^{-1}]	7000	5500	5000	5000
Rotor inertia without brake	J_M	[$kgcm^2$]	1.13	1.67	6.28	9.37
Rotor inertia with brake	J_M	[$kgcm^2$]	1.24	1.78	6.77	10.15
Mass with standard braking resistor without holding brake	m	[kg]	4.10	4.85	8.10	10.15
Mass with standard braking resistor with holding brake	m	[kg]	4.60	5.40	8.80	10.60
LXM32i control unit	m	[kg]	0.50	0.50	0.50	0.50

1) Conditions for performance data: Mounted to steel plate (2.5 x flange size)^2 area, 10 mm thickness, centered hole.
2) M_0=Continuous stall torque at low speed of rotation and 100% duty cycle; at speeds of rotation of < 20 min^{-1} the continuous stall torque is reduced to 87%
3) At n = 20 min^{-1} and maximum operating temperature
4) At a mains impedance corresponding to a short-circuit current of the supply mains of 1 kA
5) Extreme case, off/on pulse before the inrush current limitation responds, see next line for maximum time
6) Fuses: Circuit breakers with B or C characteristic; see "3.10 Conditions for UL 508C" for UL. Lower ratings are permissible. The fuse must be rated in such a way that the fuse does not trip at the specified input current.

0198441113956, V1.00, 07.2013

3.6.1.4 BMi 400V$_{ac}$ three-phase

			BMi0702	BMi0703	BMi1002	BMi1003
Winding			**P**	**P**	**P**	**P**
Continuous stall torque [1]	M_0 [2]	[Nm]	2.07	2.82	4.48	6.55
Peak torque	M_{max}	[Nm]	6.42	8.06	13.92	18.87
Torque constant [3]	k_t	[Nm/A]	1.24	1.52	1.32	1.79
Nominal speed of rotation	n_N	[min^{-1}]	3600	3300	3800	3000
Nominal torque	M_N	[Nm]	2.02	2.58	4.34	6.38
Nominal power [4]	P_N	[kW]	0.76	0.89	1.73	2.01
Nominal current motor	I_N	[A_{rms}]	1.80	1.87	3.50	3.85
Maximum current motor	I_{max}	[A_{rms}]	6.00	6.00	12.00	12.00
Technical data - electrical						
Input current at nominal power and nominal voltage)		[A_{rms}]	2.68	2.94	5.74	6.25
Inrush current limitation		[A]	1.9	1.9	1.9	1.9
Maximum inrush current [5]		[A]	126	126	196	196
Time for maximum inrush current		[ms]	0.68	0.68	0.96	0.96
Total harmonic distortion THD of the input current)		[%]	174.67	170.87	156.79	154.80
Short-circuit current rating (SCCR)		[kA]	5	5	5	5
Maximum fuse to be connected upstream [6]		[A]	25	25	25	25
Technical data - mechanical						
Maximum permissible speed of rotation	n_{max}	[min^{-1}]	7000	5500	5000	5000
Rotor inertia without brake	J_M	[kgcm^2]	1.13	1.67	6.28	9.37
Rotor inertia with brake	J_M	[kgcm^2]	1.24	1.78	6.77	10.30
Mass with standard braking resistor without holding brake	m	[kg]	4.10	4.85	8.10	10.15
Mass with standard braking resistor with holding brake	m	[kg]	4.60	5.40	8.80	10.60
LXM32i control unit	m	[kg]	0.50	0.50	0.50	0.50

1) Conditions for performance data: Mounted to steel plate (2.5 x flange size)^2 area, 10 mm thickness, centered hole.
2) M_0=Continuous stall torque at low speed of rotation and 100% duty cycle; at speeds of rotation of < 20 min^{-1} the continuous stall torque is reduced to 87%
3) At n = 20 min^{-1} and maximum operating temperature
4) At a mains impedance corresponding to a short-circuit current of the supply mains of 1 kA
5) Extreme case, off/on pulse before the inrush current limitation responds, see next line for maximum time
6) Fuses: Circuit breakers with B or C characteristic; see "3.10 Conditions for UL 508C" for UL. Lower ratings are permissible. The fuse must be rated in such a way that the fuse does not trip at the specified input current.

0198441113956, V1.00, 07.2013

3.6.1.5 BMi 480V$_{ac}$ three-phase

			BMi0702	BMi0703	BMi1002	BMi1003
Winding			**P**	**P**	**P**	**P**
Continuous stall torque [1]	M_0 [2]	[Nm]	2.07	2.68	4.16	6.04
Peak torque	M_{max}	[Nm]	6.42	8.06	13.92	18.87
Torque constant [3]	k_t	[Nm/A]	1.24	1.52	1.32	1.79
Nominal speed of rotation	n_N	[min^{-1}]	4400	3800	4700	3600
Nominal torque	M_N	[Nm]	2.01	2.35	4.00	5.57
Nominal power [4]	P_N	[kW]	0.93	0.94	1.69	2.10
Nominal current motor	I_N	[A_{rms}]	1.80	1.71	3.25	3.55
Maximum current motor	I_{max}	[A_{rms}]	6.00	6.00	12.00	12.00
Technical data - electrical						
Input current at nominal power and nominal voltage)		[A_{rms}]	2.23	2.46	4.80	5.23
Inrush current limitation		[A]	1.9	1.9	1.9	1.9
Maximum inrush current [5]		[A]	193	193	296	296
Time for maximum inrush current		[ms]	0.70	0.70	0.96	0.96
Total harmonic distortion THD of the input current)		[%]	177.00	174.33	157.66	156.11
Short-circuit current rating (SCCR)		[kA]	5	5	5	5
Maximum fuse to be connected upstream [6]		[A]	25	25	25	25
Technical data - mechanical						
Maximum permissible speed of rotation	n_{max}	[min^{-1}]	7000	5500	5000	5000
Rotor inertia without brake	J_M	[kgcm^2]	1.13	1.67	6.28	9.37
Rotor inertia with brake	J_M	[kgcm^2]	1.24	1.78	6.77	10.30
Mass with standard braking resistor without holding brake	m	[kg]	4.10	4.85	8.10	10.15
Mass with standard braking resistor with holding brake	m	[kg]	4.60	5.40	8.80	10.60
LXM32i control unit	m	[kg]	0.50	0.50	0.50	0.50

1) Conditions for performance data: Mounted to steel plate (2.5 x flange size)^2 area, 10 mm thickness, centered hole.
2) M_0=Continuous stall torque at low speed of rotation and 100% duty cycle; at speeds of rotation of < 20 min^{-1} the continuous stall torque is reduced to 87%
3) At n = 20 min^{-1} and maximum operating temperature
4) At a mains impedance corresponding to a short-circuit current of the supply mains of 1 kA
5) Extreme case, off/on pulse before the inrush current limitation responds, see next line for maximum time
6) Fuses: Circuit breakers with B or C characteristic; see "3.10 Conditions for UL 508C" for UL. Lower ratings are permissible. The fuse must be rated in such a way that the fuse does not trip at the specified input current.

0198441113956, V1.00, 07.2013

3.6.2 Shaft-specific data

3.6.2.1 Force for pressing on

Maximum force during pressing on

The force applied during pressing on must not exceed the maximum permissible axial force, see chapter "3.6.2.2 Shaft load". Applying assembly paste (such as Klüberpaste 46 MR 401) to the shaft and the component to be mounted reduces friction and mechanical impact on the surfaces.

If the shaft has a thread, it is recommend to use it to press on the component to be mounted. This way there is no axial force acting on the rolling bearing.

It is also possible to shrink-fit, clamp or glue the component to be mounted.

The following table shows the maximum permissible axial force F_A at standstill.

BMi		**070**	**100**
	[N] (lb)	80 (18)	160 (36)

0198441113956, V1.00, 07.2013

3.6.2.2 Shaft load

The following conditions apply:

- The permissible force applied during pressing on must not be exceed.
- Radial and axial limit loads must not be applied simultaneously
- Nominal bearing service life in operating hours at a probability of failure of 10% (L_{10h} = 20000 hours)
- Mean speed of rotation n = 4000 min^{-1}
- Ambient temperature = 40 °C
- Peak torque = Duty types S3 - S8, 10% duty cycle
- Nominal torque = Duty type S1, 100% duty cycle

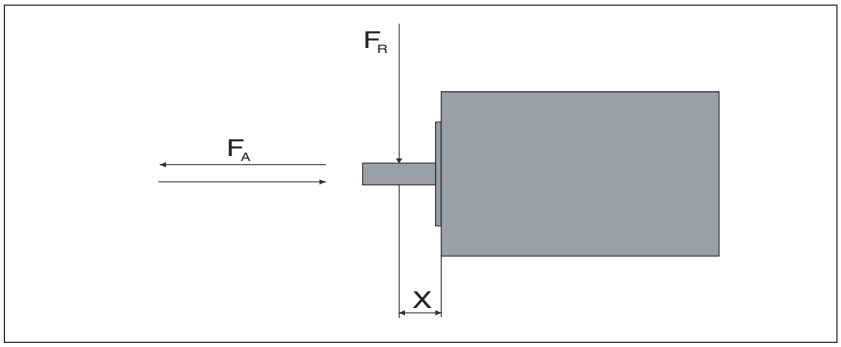

Figure 5: Shaft load

The point of application of the forces depends on the motor size:

Motor version		Values for "X"
BMi0702	[mm]	11.5
BMi0703	[mm]	15
BMi100	[mm]	20

The following table shows the maximum radial shaft load F_R.

BMi...		070 2	070 3	100 2	100 3
1000 min^{-1}	[N]	710	730	990	1050
2000 min^{-1}	[N]	560	580	790	830
3000 min^{-1}	[N]	490	510	690	730
4000 min^{-1}	[N]	450	460	620	660
5000 min^{-1}	[N]	410	430	580	610
6000 min^{-1}	[N]	390	400	-	-

0198441113956, V1.00, 07.2013

The following table shows the maximum axial shaft load F_A.

BMi...		070 2	070 3	100 2	100 3
1000 min^{-1}	[N]	142	146	198	210
2000 min^{-1}	[N]	112	116	158	166
3000 min^{-1}	[N]	98	102	138	146
4000 min^{-1}	[N]	90	92	124	132
5000 min^{-1}	[N]	82	86	116	122
6000 min^{-1}	[N]	78	80	-	-

3.6.3 Holding brake (option)

The holding brake in the motor has the task of holding the current motor position when the power stage is disabled, even if external forces act (for example, in the case of a vertical axis). The holding brake is not a safety function and not a service brake.

Size		BMi070	BMi1002	BMi1003
Holding torque [1)]	[Nm]	3.0	5.5	9
Holding brake release time	[ms]	80	70	90
Holding brake application time	[ms]	17	30	40
Maximum speed of rotation during braking of moving loads (irregular operation)		3000	3000	3000
Maximum number of decelerations during braking of moving loads and 3000 min^{-1} (irregular operation)		500	500	500
Maximum number of decelerations during braking of moving loads per hour at even distribution (irregular operation)		20	20	20
Maximum kinetic energy that can be transformed into heat per deceleration during braking of moving loads (irregular operation)	[J]	130	150	150

1) The holding brake is factory run in. After longer storage periods, parts of the holding brake may corrode. See "Checking/running in the holding brake" in chapter "13 Service, maintenance and disposal".

Table 1: Technical data holding brake

0198441113956, V1.00, 07.2013

3.6.4 Encoder

SKS36 Singleturn

This motor encoder measures an absolute value within one revolution during switching on and continues to count incrementally from this point.

Resolution in increments	Depending on evaluation
Resolution per revolution	128 sin/cos periods
Measuring range absolute	1 revolution
Accuracy of digital absolute value	±0.0889°
Accuracy of the incremental position	±0.0222°
Maximum angular acceleration	200,000 rad/s^2

SKM36 Multiturn

This motor encoder measures an absolute value within 4096 revolutions during switching on and continues to count incrementally from this point.

Resolution in increments	Depending on evaluation
Resolution per revolution	128 sin/cos periods
Measuring range absolute	4096 revolutions
Accuracy of digital absolute value	±0.0889°
Accuracy of the incremental position	±0.0222°
Maximum angular acceleration	200,000 rad/s^2

SEK37 Singleturn

This motor encoder measures an absolute value within one revolution during switching on and continues to count incrementally from this point.

Resolution in increments	Depending on evaluation
Resolution per revolution	16 sin/cos periods
Measuring range absolute	1 revolution
Accuracy of position	± 0.08°

SEL37 Multiturn

This motor encoder measures an absolute value within 4096 revolutions during switching on and continues to count incrementally from this point.

Resolution in increments	Depending on evaluation
Resolution per revolution	16 sin/cos periods
Measuring range absolute	4096 revolutions
Accuracy of position	± 0.08°

0198441113956, V1.00, 07.2013

3.7 Braking resistor

The product is shipped with a standard braking resistor. If the braking resistor is not sufficient for the dynamics requirements of the applications, it must be replaced with an external braking resistor.

The resistance values for external braking resistors must not be below the specified minimum resistance.

3.7.1 Data for calculation of the braking resistor

BMi		**070 Single-phase**	**100 Single-phase**	**070 Three-phase**	**100 Three-phase**
Resistance standard braking resistor	[Ω]	35	35	70	70
Continuous power standard braking resistor P_{PR}	[W]	20	20	20	20
Peak energy E_{CR}	[Ws]	264	264	507	507
External braking resistor minimum	[Ω]	43	33	70	60
External braking resistor maximum [1)]	[Ω]	73	37	160	77
Maximum continuous power external braking resistor	[W]	400	700	400	1000
Switch-on voltage	[V]	430	430	780	780
Capacitance	[µF]	780	1560	195	390
Energy absorption of internal capacitors E_{var} at nominal voltage 115 [V] +10%	[Ws]	60	119	-	-
Energy absorption of internal capacitors E_{var} at nominal voltage 200 [V] +10%	[Ws]	343	69	-	-
Energy absorption of internal capacitors E_{var} at nominal voltage 230 [V] +10%	[Ws]	18	35	-	-
Energy absorption of internal capacitors E_{var} at nominal voltage 208 [V +10%]	[Ws]	-	-	46	91
Energy absorption of internal capacitors E_{var} at nominal voltage 380 [V +10%]	[Ws]	-	-	25	50
Energy absorption of internal capacitors E_{var} at nominal voltage 400 [V] +10%	[Ws]	-	-	22	43
Energy absorption of internal capacitors E_{var} at nominal voltage 480 [V +10%]	[Ws]	-	-	5	10

1) The maximum specified braking resistor can derate the peak power of the device. Depending on the application, it is possible to use a higher ohm resistor.

0198441113956, V1.00, 07.2013

3.7.2 DC bus data for calculation of the braking resistor

Number of phases		Single-phase	Single-phase	Three-phase	Three-phase	Three-phase
Nominal voltage	[V_{ac}]	115	230	208	400	480
Nominal voltage DC bus	[V_{dc}]	163	325	294	566	679
Undervoltage limit	[V_{dc}]	55	130	150	350	350
Voltage limit: activation of Quick Stop	[V_{dc}]	60	140	160	360	360
Overvoltage limit	[V_{dc}]	450	450	820	820	820

3.7.3 External braking resistors (accessories)

VW3A760...		2Rxx	3Rxx	4Rxx 1)	5Rxx	6Rxx	7Rxx 1)
Resistance	[Ω]	27	27	27	72	72	72
Continuous power	[W]	100	200	400	100	200	400
Maximum time in braking at 115 V / 230 V	[s]	0.552	1.08	2.64	1.44	3.72	9.6
Peak power at 115 V / 230 V	[kW]	6.8	6.8	6.8	2.6	2.6	2.6
Maximum peak energy at 115 V / 230 V	[Ws]	3800	7400	18100	3700	9600	24700
Maximum time in braking at 400 V / 480 V	[s]	0.084	0.216	0.504	0.3	0.78	1.92
Peak power at 400 V / 480 V	[kW]	22.5	22.5	22.5	8.5	8.5	8.5
Maximum peak energy at 400 V / 480 V	[Ws]	1900	4900	11400	2500	6600	16200
Degree of protection		IP65	IP65	IP65	IP65	IP65	IP65
UL approval (file no.)		E233422	E233422		E233422	E233422	

1) Resistors with a continuous power of 400 W are not UL/CSA-approved.

0198441113956, V1.00, 07.2013

3.8 Internal mains filter

Limit values

This product meets the EMC requirements according to the standard IEC 61800-3 if the measures described in this manual are implemented during installation.

If the selected composition is not designed for category C1, note the following:

⚠ WARNING

HIGH-FREQUENCY INTERFERENCE

In a residential environment this product may cause high-frequency interference that requires interference suppression.

Failure to follow these instructions can result in death or serious injury.

Emission

The following limit values for emission are complied with if the installation is EMC-compliant and if the cables offered as accessories are used.

Conducted interference	Radiated emission
Category C2	Category C2

0198441113956, V1.00, 07.2013

3.9 Tightening torque and screws

Tightening torque and property class of screws

Tightening torque of the fastening screw for LXM32i to BMi M5 x 25 1)	[Nm (lb•in)]	6.5 (57.53)
Tightening torque of the fastening screws for the supply voltage module M4 x 16 1)	[Nm (lb•in)]	2.5 (22.13)
Tightening torque of the fastening screws for the standard braking resistor M4 x 16 1)	[Nm (lb•in)]	2.5 (22.13)
Tightening torque of the fastening screws for the connection module of the external braking resistor M4 x 16 1)	[Nm (lb•in)]	2.5 (22.13)
Tightening torque of the fastening screw for the I/O module M4 x 16 1)	[Nm (lb•in)]	2.5 (22.13)
Tightening torque of the industrial connectors for the I/O module M8	[Nm (lb•in)]	0.2 (1.77)
Tightening torque of the industrial connectors for the I/O module M12	[Nm (lb•in)]	0.4 (3.54)
Property class	H	8.8

1) Washer required

Table 2: Tightening torques and property classes

Cable glands

The specified tightening torques are maximum values for compression nuts. Keep tightening the compression nut until the tightening torque as per table is reached or until the sealing insert forms a small hump protruding over the compression nut. The cable gland bodies must be tightened with the maximum tightening torque for the appropriate thread size; the threads must be locked to avoid unintended loosening, if necessary.

Use genuine accessories or cable glands with a degree of protection of at least IP65 (form sealing ring or flat sealing ring required).

Tightening torque of cable gland M12 x 1.5 x 6 (body)	[Nm (lb•in)]	1.5 (13.28)
Tightening torque of cable gland M12 (compression nut)	[Nm (lb•in)]	1.0 (8.85)
Tightening torque of cable gland M16 x 1.5 x 6 (cable gland body)	[Nm (lb•in)]	3.0 (26.55)
Tightening torque of cable gland M16 (compression nut)	[Nm (lb•in)]	2.0 (17.70)
Tightening torque of cable gland M20 (compression nut)	[Nm (lb•in)]	4.0 (35.40)

Table 3: Tightening torques cable glands

0198441113956, V1.00, 07.2013

3.10 Conditions for UL 508C

If the product is used to comply with UL 508C, the following conditions must also be met:

Ambient temperature during operation

Surrounding air temperature	[°C]	0 ... +40

Fuses

Use class CC or J fuses as per UL 248-8.

Maximum fuse rating of fuse to be connected upstream	[A]	25

Wiring

Use at least 60/75 °C copper conductors.

400/480 V three-phase devices

400/480 V three-phase devices may only be operated via mains up to 480Y/277 Vac.

Overvoltage category

"Use only in overvoltage category III or where the maximum available Rated Impulse Withstand Voltage Peak is equal or less than 4000 Volts.", or equivalent.

Motor Overload Protection

This equipment provides Solid State Motor Overload Protection at 110% of maximum FLA (Full Load Ampacity).

Components

Use only UL-listed components (for example, cable glands).

3.11 Certifications

Product certifications:

TÜV Nord	SLA-0046/2010
UL	E153659
Certification	EtherCAT Conformance Test
Assigned Vendor ID	0x800005A
Test Report Number	0x800005A_004 (Family device test)
EtherCAT Test Center	Beckhoff Automation GmbH, Nuremberg, Germany

0198441113956, V1.00, 07.2013

3.12 Declaration of conformity

Schneider Electric

EC DECLARATION OF CONFORMITY

We : Schneider Electric Industry SA
35 rue Joseph Monier
Rueil Malmaison 92506 – France

Hereby declare under our own responsibility that the products:

Trademark	Schneider Electric
Product	AC servo drive **LXM32iCAN, LXM32iECT and BMIXXX series**
List of reference and options	See next 2 pages

Serial number: ZZYYXXXXXX (ZZ: two last digit of the Year + 10; YY: supplier code; continuous number)

Are in conformity with the requirements of the following directives and conformity was checked in accordance with the following standards.

Directive	Harmonized standard / Notified body reference
Directive 2006/95/EC OF THE EUROPEAN PARLIAMENT AND OF THE CONCIL of 12 December 2006 on the harmonization of the laws of the member states relating to electrical equipment designed for use within certain voltage limits	EN 61800-5-1: 2007 Adjustable speed electrical power drive systems – Part 5-1: Safety requirements – Electrical, thermal and energy. (IEC 61800-5-1:2007)
Directive 2004/108/EC OF THE EUROPEAN PARLIAMENT AND OF THE CONCIL of 15 December 2004 on the approximation of the laws of the member states relating to electromagnetic compatibility and repealing directive 89/336/EEC	EN 61800-3: 2004 Adjustable speed electrical power drive systems – part 3: EMC requirements and specific test methods. (IEC 61800-3:2004)
Directive 2006/42/EC OF THE EUROPEAN PARLIAMENT AND OF THE CONCIL of 17 May2006 on machinery, and amending Directive 95/16/EC (recast) Applying article 12(3)a, third alternative.	EN ISO 13849-1/2:2006 PL e (Category 3) Safety of machinery – Safety-related parts of control systems.
	EN61800-5-2:2007 SIL 3 Adjustable speed electrical power drive systems – Part 5-2: Safety requirements – Fonctional. (IEC 61800-5-2:2007)
	EN 62061:2005 SIL 3 Safety of machinery – Functional safety of safety-related electrical, electronic and programmable electronic control systems.
	A volontary certification has been carried out by TÜV NORD Augsburg Certificate n°SLA-0046/2010

And also the standards:
IEC 61508: 2002 (parts 1 & 2), SIL 3

Subject to correct installation, maintenance and use conforming to its intended purpose, to the applicable regulations and standards, to the supplier's instructions and to accepted rules of the art.
This declaration becomes invalid in the case of any modification to the products not authorized by us.

Compliance with the EMC Directives will require the application of the EMC guide giving details and advices for installation of products used. The guides are available on http://www.schneider.com

The undersigned also agrees to transmit relevant information in response to a reasoned request from any adequate way by a national authority.
Person in charge of documentation:
Frédéric Roussel, Schneider Toshiba Inverter Europe, rue André Blanchet, 27120 Pacy/Eure – France.

First year of affixing the CE marking: 2013

Issued at Niederschopfheim - GERMANY: 16/05/2013

Authorised Signatories

Name: Frederic ROUSSEL
Title: Certification Manager

Signature:

Name: Thomas MARTIS
Title: CEO SEA GmbH, VP Quality & OCC Industrialization

Signature:

COPYING WITHOUT WRITTEN AUTHORISATION

Ipower-3_CE Declaration.doc

0198441113956, V1.00, 07.2013

Schneider Electric

EC DECLARATION OF CONFORMITY

Single phase 200V to 240Vac

Reference (1)	Size description
BMI0702TXXXX	70
BMI0703TXXXX	70
BMI1002TXXXX	100

Three phase 380V to 480Vac

Reference (1)	Size description
BMI0702PXXXX	70
BMI0703PXXXX	70
BMI1002PXXXX	100
BMI1003PXXXX	100

(1) XXXX representes the variante of options mounted

Control units

Reference	Description
LXM32ICAN	CANopen / CANmotion
LXM32IECT	EtherCAT

Options considered with Lexium 32i:

Designation	Catalog reference	Description
Power Connector	VW3M9001	LXM32I 1 PHASE POWER SUPPLY MODULE
	VW3M9002	LXM32I 3 PHASE POWER SUPPLY MODULE
Braking Resistor	VW3M9010	LXM32I MODULE EXTERNAL BRAKING RESISTOR
	VW3M9021	LXM32I MODULE STANDARD BRAKING RESIST 1P
	VW3M9022	LXM32I MODULE STANDARD BRAKING RESIST 3P
Gland	VW3M9508	LXM32I CABLE GLANDS M12 I/O, STO, 12 PCS
	VW3M9512	XM32I CABLE GLANDS M16 FIELDBUS,10 PCS

COPYING WITHOUT WRITTEN AUTHORISATION PROHIBITED.

Ipower-3_CE Declaration.doc

0198441113956, V1.00, 07.2013

Schneider Electric

EC DECLARATION OF CONFORMITY

Options considered with Lexium 32i:

Designation	Catalog reference	Description
IO Connector	VW3M9101	LXM32I MODULE CAN M12;4DI M8 SOURCE, STO
	VW3M9102	LXM32I MODULE CAN M12;4DI M8 SOURCE
	VW3M9103	LXM32I MODULE CAN M12;2DI M8 SOURCE, STO
	VW3M9104	LXM32I MODULE CAN M12;2DI M8 SOURCE
	VW3M9105	LXM32I MODULE TERMINAL CAN;4DI,2DO,STO
	VW3M9106	LXM32I MODULE ECT M12;4DI M8 SOURCE, STO
	VW3M9107	LXM32I MODULE ECT M12;4DI M8 SOURCE
	VW3M9108	LXM32I MODULE ECT M12;2DI M8 SOURCE, STO
	VW3M9109	LXM32I MODULE ECT M12;2DI M8 SOURCE
	VW3M9110	LXM32I MODULE TERMINAL ECT;4DI,2DO,STO
	VW3M9201	LXM32I MODULE CAN M12;4DI M8 SINK, STO
	VW3M9202	LXM32I MODULE CAN M12;4DI M8 SINK
	VW3M9203	LXM32I MODULE CAN M12;2DI M8 SINK, STO
	VW3M9204	LXM32I MODULE CAN M12;2DI M8 SINK
	VW3M9205	LXM32I MODULE ECT M12;4DI M8 SINK, STO
	VW3M9206	LXM32I MODULE ECT M12;4DI M8 SINK
	VW3M9207	LXM32I MODULE ECT M12;2DI M8 SINK, STO
	VW3M9208	LXM32I MODULE ECT M12;2DI M8 SINK
	VW3M9209	LXM32I MODULE CAN M12;4DI M8 SINK
STO Cables	VW3M9403	LXM32I STO PREASSEMBLED CABLE 3M, M8
	VW3M9405	LXM32I STO PREASSEMBLED CABLE 5M, M8
	VW3M9410	LXM32I STO PREASSEMBLED CABLE 10M, M8
	VW3M9415	LXM32I STO PREASSEMBLED CABLE 15M, M8
	VW3M9420	LXM32I STO PREASSEMBLED CABLE 20M, M8

COPYING WITHOUT WRITTEN AUTHORISATION PROHIBITED.

Ipower-3_CE Declaration.doc

0198441113956, V1.00, 07.2013

3.13 TÜV certificate for functional safety

TÜV NORD

Certificate

No. SLA-0046/2010, V1.0

TÜV Nord Systems GmbH & Co. KG hereby certifies

Schneider Electric Motion Deutschland GmbH
Breslauer Straße 7
77933 Lahr

that the safety function "Safe Torque Off" (STO) in the integrated drive system consisting of the parts

LXM32i, BMi and LXM32i modules

is capable for safety related applications up to SIL 3, SIL_{CL} 3 up to PL e (category 3) respectively and meets the requirements listed in the following standards.

IEC 61508-1/-2: 2010

IEC 61800-5-2: 2007

IEC 62061: 2005

ISO 13849-1/-2: 2006

The certification is based on the report SLA-0046/2010TB-1 in the valid version. This certificate entitles the holder to use the pictured Safety Approved mark.

Expire date: 2018-01-23
Reference No.: G.SEB.BS.02.033.02.031

Augsburg, 2013-01-23

Gerhard M. Rieger

Voluntary Certification

TÜV NORD
TÜV NORD Systems GmbH & Co. KG
Safety Approved
IEC 61508-1/-2: 2010, SIL 3
IEC 61800-5-2: 2007, SIL 3
IEC 62061: 2005, SILcL 3
ISO 13849-1/-2: 2006, PL e
(Category 3)
SLA-0046/2010

TÜV NORD Systems GmbH & Co.KG Geschäftsstelle Süd Halderstraße 27 D-86150 Augsburg

4 Basics

4

4.1 Functional safety

Automation and safety engineering are two areas that were completely separated in the past but recently have become more and more integrated. Engineering and installation of complex automation solutions are greatly simplified by integrated safety functions.

Usually, the safety engineering requirements depend on the application. The level of the requirements results from the risk and the hazard potential arising from the specific application.

Integrated safety function "Safe Torque Off" STO

The integrated safety function STO (IEC 61800-5-2) allows for a category 0 stop as per IEC 60204-1 without external power contactors. It is not necessary to interrupt the supply voltage for a category 0 stop. This reduces the system costs and the response times.

IEC 61508 standard

The standard IEC 61508 "Functional safety of electrical/electronic/ programmable electronic safety-related systems" covers the safety-related function. Instead of a single component, an entire function chain (for example, from a sensor through the logical processing units to the actuator) is considered as a unit. This function chain must meet the requirements of the specific safety integrity level as a whole. Systems and components that can be used in various applications for safety tasks with comparable risk levels can be developed on this basis.

SIL, Safety Integrity Level

The standard IEC 61508 defines 4 safety integrity levels (SIL) for safety functions. SIL1 is the lowest level and SIL4 is the highest level. A hazard and risk analysis serves as a basis for determining the required safety integrity level. This is used to decide whether the relevant function chain is to be considered as a safety function and which hazard potential it must cover.

0198441113956, V1.00, 07.2013

PFH, Probability of a dangerous hardware failure per hour

To maintain the safety function, the IEC 61508 standard requires various levels of measures for avoiding and controlling faults, depending on the required SIL. All components of a safety function must be subjected to a probability assessment to evaluate the effectiveness of the measures implemented for controlling faults. This assessment determines the PFH (probability of a dangerous failure per hour) for a safety system. This is the probability per hour that a safety system fails in a hazardous manner and the safety function cannot be correctly executed. Depending on the SIL, the PFH must not exceed certain values for the entire safety system. The individual PFH values of a function chain are added. The result must not exceed the maximum value specified in the standard.

SIL	PFH at high demand or continuous demand
4	$\geq 10^{-9}$ ... $<10^{-8}$
3	$\geq 10^{-8}$ ... $<10^{-7}$
2	$\geq 10^{-7}$ ... $<10^{-6}$
1	$\geq 10^{-6}$ ... $<10^{-5}$

HFT and SFF

Depending on the SIL for the safety system, the IEC 61508 standard requires a specific hardware fault tolerance HFT in connection with a specific proportion of safe failures SFF (safe failure fraction). The hardware fault tolerance is the ability of a system to execute the required safety function in spite of the presence of one or more hardware faults. The SFF of a system is defined as the ratio of the rate of safe failures to the total failure rate of the system. According to IEC 61508, the maximum achievable SIL of a system is partly determined by the hardware fault tolerance HFT and the safe failure fraction SFF of the system.

IEC 61508 distinguishes two types of subsystems (type A subsystem, type B subsystem). These types are specified on the basis of criteria which the standard defines for the safety-relevant components.

SFF	HFT type A subsystem				HFT type B subsystem			
	0	1	2		0	1	2	
< 60%	SIL1	SIL2	SIL3		---	SIL1	SIL2	
60% ... <90%	SIL2	SIL3	SIL4		SIL1	SIL2	SIL3	
90% ... < 99%	SIL3	SIL4	SIL4		SIL2	SIL3	SIL4	
≥99%	SIL3	SIL4	SIL4		SIL3	SIL4	SIL4	

Fault avoidance measures

Systematic errors in the specifications, in the hardware and the software, usage faults and maintenance faults of the safety system must be avoided to the maximum degree possible. To meet these requirements, IEC 61508 specifies a number of measures for fault avoidance that must be implemented depending on the required SIL. These measures for fault avoidance must cover the entire life cycle of the safety system, i.e. from design to decommissioning of the system.

0198441113956, V1.00, 07.2013

5 Engineering

5

This chapter contains information on the application of the product that is vital in the engineering phase.

Subject	Page
"5.1 Electromagnetic compatibility, EMC"	54
"5.2 Cables"	56
"5.3 Residual current device"	59
"5.5 Operation in an IT mains"	60
"5.6 Mains reactor"	61
"5.7 Mains filter"	62
"5.8 Rating the braking resistor"	63
"5.9 Safety function STO ("Safe Torque Off")"	69
"5.10 Logic type"	76
"5.11 Monitoring functions"	77
"5.12 Configurable inputs and outputs"	78
"5.13 Mounting types of the modules"	79

0198441113956, V1.00, 07.2013

5.1 Electromagnetic compatibility, EMC

⚠ WARNING

SIGNAL AND DEVICE INTERFERENCE

Signal interference can cause unexpected responses of the device.

- Install the wiring in accordance with the EMC requirements.
- Verify compliance with the EMC requirements.

Failure to follow these instructions can result in death, serious injury or equipment damage.

Limit values

This product meets the EMC requirements according to the standard IEC 61800-3 if the measures described in this manual are implemented during installation.

If the selected composition is not designed for category C1, note the following:

⚠ WARNING

HIGH-FREQUENCY INTERFERENCE

In a residential environment this product may cause high-frequency interference that requires interference suppression.

Failure to follow these instructions can result in death or serious injury.

The specified limit values require EMC measures to be taken for mounting and wiring. Note the following requirements.

Shielded cables

EMC measures	Objective
Connect large surface areas of cable shields, use cable clamps and ground straps.	Reduces emissions.
Ground shields of digital signal wires at both ends by connecting them to a large surface area or via conductive connector housings.	Reduces interference affecting the signal wires, reduces emissions

0198441113956, V1.00, 07.2013

Cable installation

EMC measures	Objective
Do not route fieldbus cables and signal wires in a single cable duct together with lines with DC and AC voltages of more than 60 V. (Fieldbus cables, signal lines and analog lines may be in the same cable duct) Recommendation: Use separate cable ducts at least 20 cm apart.	Reduces mutual interference
Keep cables as short as possible. Do not install unnecessary cable loops, use short cables from the central grounding point in the control cabinet to the external ground connection.	Reduces capacitive and inductive interference.
Use equipotential bonding conductors in the following cases: wide-area installations, different voltage supplies and installation across several buildings.	Reduces current in the cable shield, reduces emissions.
Use fine stranded equipotential bonding conductors.	Diverts high-frequency interference currents.
If motor and machine are not conductively connected, for example by an insulated flange or a connection without surface contact, you must ground the motor with a ground strap or a ground wire. The conductor cross section must be at least 10 mm^2 (AWG 6).	Reduces emissions, increases immunity.

Power supply

EMC measures	Objective
Operate product on mains with grounded neutral point.	Enables effectiveness of mains filter.
Surge arrester if there is a risk of overvoltage.	Reduces the risk of damage caused by overvoltage.

Additional measures for EMC improvement

Depending on the application, the following measures can improve the EMC-dependent values:

EMC measures	Objective
Use mains reactors	Reduces mains harmonics, prolongs product service life.

0198441113956, V1.00, 07.2013

5.2 Cables

Suitability of the cables

Cables must not be twisted, stretched, crushed or bent. Use only cables that comply with the cable specification. Consider the following in determining suitability of the cables:

- Suitable for drag chain applications
- Temperature range
- Chemical resistance
- Outdoor installation
- Underground installation

Connecting shields

Shield connection possibilities:

- I/O module with industrial connectors: Connect shield to connector housing
- I/O module with spring terminals: The shields are connected in the housing cover by means of shield clips, see "6.3.4.2 Overview I/O module with spring terminals".

Equipotential bonding conductors

Potential differences can result in excessive currents on the cable shields. Use equipotential bonding conductors to reduce currents on the cable shields.

The equipotential bonding conductor must be rated for the maximum current flowing. Practical experience has shown that the following conductor cross sections can be used:

- 16 mm^2 (AWG 4) for equipotential bonding conductors up to a length of 200 m
- 20 mm^2 (AWG 4) for equipotential bonding conductors with a length of more than 200 m

0198441113956, V1.00, 07.2013

Conductor cross sections according to method of installation

The following sections describe the conductor cross sections for two standard methods of installation:

- Method of installation B2:

  Cables in conduits or cable trunking systems
- Method of installation E:

  Cables on open cable trays

Cross section [mm²] 1)	**Current carrying capacity with method of installation E [A]** 2)	**Current-carrying capacity with method of installation B2 [A]** 2)
0.75	10.4	8.5
1	12.4	10.1
1.5	16.1	13.1
2.5	22	17.4
4	30	23
6	37	30
10	52	40
16	70	54
25	88	70

1) See chapter "12 Accessories and spare parts" for available cables.
2) Values as per IEC 60204-1 for continuous operation, copper conductors and ambient air temperature 40°C; see IEC 60204-1 for additional information.

Note the derating factors for grouping of cables and correction factors for other ambient conditions (IEC 60204-1).

The conductors must have a sufficiently large cross section so that the upstream fuse can trip.

In the case of longer cables, it may be necessary to use a greater conductor cross section to reduce the energy losses.

0198441113956, V1.00, 07.2013

5.2.1 Overview of the required cables

The properties of the required cables are listed in the table below. Use pre-assembled cables to reduce the risk of wiring errors. Pre-assembled cables can be found in chapter "12 Accessories and spare parts", page 467. If the product is used to comply with the requirements as per UL 508C, the conditions specified in chapter "3.10 Conditions for UL 508C", page 46, must be met.

Moving cables must be fastened (for example, to a drag chain) so that the movement of the cable cannot act on the cable gland.

	Maximum cable length [m]	**Minimum cable diameter 1)[mm]**	**Maximum cable diameter 1) [mm]**	**Minimum conductor cross section [mm²] (AWG)**	**Shield**	**Twisted pair**	**PELV**
Digital inputs / outputs	30	2.5 (für UL 5)	6.5	0.14 (AWG 24)	-	-	Required
Safety function STO 2)	–	2.5 (für UL 5)	6.5	0.75 (AWG 18)	Required, one end grounded	-	Required
Fieldbus EtherCAT	100 m	2.5 (für UL 5)	6.5	8 * 0.25 (8 * AWG 22)	Required, both ends grounded	Required	Required
External braking resistor	3	6	10.5	As power stage supply	Required, both ends grounded	-	-
Mains voltage	–	8	15	– 3)	-	-	-
PC, commissioning interface	100	-	-	0.25 (AWG 22)	Required, both ends grounded	Required	Required

1) I/O module with spring terminals..
2) See chapter "5.9.4 Protected cable installation for safety-related signals".
3) See "Conductor cross sections according to method of installation"

Table 4: Cable specifications

0198441113956, V1.00, 07.2013

5.3 Residual current device

⚠ WARNING

THIS PRODUCT MAY CAUSE DIRECT CURRENT IN THE PROTECTIVE GROUND CONDUCTOR

If a residual current device (RCD) is used, conditions must be observed.

Failure to follow these instructions can result in death or serious injury.

Conditions for use of residual current device

If a residual current device (RCD) or a residual current monitor (RCM) is used for protection against direct or indirect contact, the following conditions must be met:

- A residual current device "type A", series s.i (super-immunized, Schneider Electric) can be used for single-phase drives.
- In all other cases, you must use a residual current device "type B", with sensitivity to all currents and with approval for frequency inverters.

Additional conditions:

- Use residual current devices with a time delay so that the residual current device does not trip inadvertently due to the peak current that occurs when the product is switched on.
  Residual current devices for 30 mA rarely have a time delay.
  Select a type that is insensitive to inadvertent tripping (for example with increased immunity).
- High-frequency currents must be filtered.
- When using residual current devices, consider the leakage currents of connected consumers.

0198441113956, V1.00, 07.2013

5.4 Wiring concept

Note the following for wiring the product:

- Use a PLC with galvanically isolated inputs and outputs in the case of internal signal power supply.
- The supply voltage for signals (PELV) may only be grounded at a single point. If the supply voltage is grounded at several points, this will result in ground loops.

5.5 Operation in an IT mains

The device is suitable for operation with the following types of mains:

Type of mains	Constraints
TT mains, TN mains	-
IT mains	Maximum installation altitude 2000 m above m.s.l.

See chapter "3.3 General features", page 28 for the approved types of mains.
See chapter "3.1 Ambient conditions" for the ambient conditions to be complied with.

0198441113956, V1.00, 07.2013

5.6 Mains reactor

A mains reactor must be used under the following conditions:

- Operation via supply mains with low impedance (short-circuit current of supply mains greater than specified in chapter "3 Technical Data", page 33).
- In the case of high demands concerning the service life of the drive.
- In the case of operation with supply mains with reactive current compensation systems.
- For improvement of the power factor at the mains input and for reduction of mains harmonics.

A mains reactor can be used for several devices. Use a mains reactor with a properly rated current.

Low-impedance supply mains cause high harmonic currents at the mains input. High harmonic currents result in considerable load on the DC bus capacitors. The load on the DC bus capacitors has a decisive impact on the service life of the devices.

0198441113956, V1.00, 07.2013

5.7 Mains filter

Limit values

This product meets the EMC requirements according to the standard IEC 61800-3 if the measures described in this manual are implemented during installation.

If the selected composition is not designed for category C1, note the following:

⚠ WARNING

HIGH-FREQUENCY INTERFERENCE

In a residential environment this product may cause high-frequency interference that requires interference suppression.

Failure to follow these instructions can result in death or serious injury.

See chapter Technical Data, page 44, for the category the device complies with.

The drives have an integrated mains filter.

5.7.1 Deactivating the Y capacitors

The ground connections of the internal Y capacitors can be disconnected (deactivation). Usually, it is not required to deactivate the ground connection of the Y capacitors.

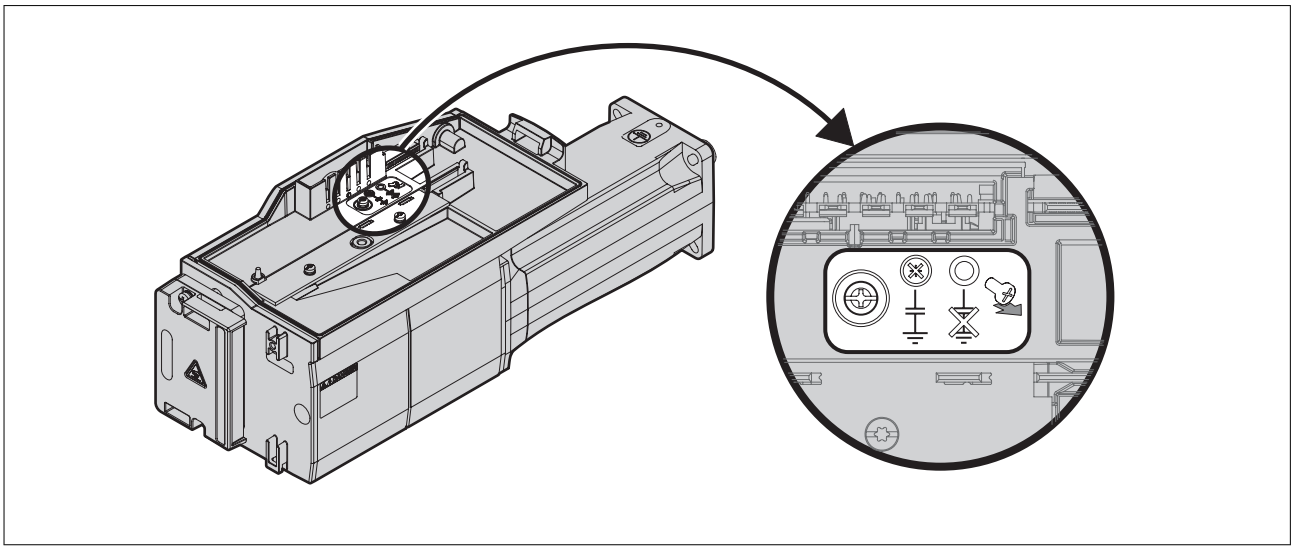

Figure 6: Screw for deactivating/activating the internal Y capacitors

To deactivate the Y capacitors, remove the screw, see Figure 6. Keep this screw so you can re-activate the Y capacitors, if required.

NOTE: The EMC limit values specified no longer apply if the Y capacitors are deactivated.

0198441113956, V1.00, 07.2013

5.8 Rating the braking resistor

⚠ DANGER

FIRE HAZARD CAUSED BY EXTERNAL DRIVING FORCES ACTING ON MOTOR

If external driving forces acting on the motor cause excessively high currents to be regenerated and supplied back to the drive, this may cause overheating and fire of the drive.

- Verify that no energy is supplied to the driving motor after an error of error classes 3 or 4.

Failure to follow these instructions will result in death or serious injury.

⚠ WARNING

MOTOR WITHOUT BRAKING EFFECT

An insufficient braking resistor causes overvoltage on the DC bus and switches off the power stage. The motor is no longer actively decelerated.

- Verify that the braking resistor has a sufficient rating.
- Check the parameter settings for the braking resistor.
- Check the I^2t value under the most critical condition by performing a test run. The device switches off at an I^2t value of 100%.
- When performing the calculation and the test run, take into account the fact that the DC bus capacitors can absorb less braking energy at higher mains voltages.

Failure to follow these instructions can result in death, serious injury or equipment damage.

Braking resistors are required for dynamic applications. During deceleration, the kinetic energy is transformed into electrical energy in the motor. The electrical energy increases the DC bus voltage. The braking resistor is activated when the defined threshold value is exceeded. The braking resistor transforms electrical energy into heat. If highly dynamic deceleration is required, the braking resistor must be well adapted to the system.

Further information on the subject	Page
Technical data "3.7 Braking resistorBraking resistor"	42
Mount- ing"6.3.6.2 Connection module for external braking resistor (accessories)"	108
Electrical installation: "5.8 Rating the braking resistor" (accessory)	63
Setting the braking resistor parameters	155
Order data for external braking resistors (accessory)	467

0198441113956, V1.00, 07.2013

5.8.1 Standard braking resistor

The drive is equipped with a standard braking resistor to absorb braking energy.

5.8.2 External braking resistor

An external braking resistor is required for applications in which the motor must be decelerated quickly and the standard braking resistor cannot absorb the excess braking energy.

Monitoring

The device monitors the power of the braking resistor. The load on the braking resistor can be read out.
The output for the external braking resistor is short-circuit protected. There is no protection in the case of a ground fault.

Selection of the external braking resistor

The rating of an external braking resistor depends on the required peak power and continuous power with which the braking resistor can be operated.

The resistance value R [Ω] is derived from the required peak power and the DC bus voltage.

$$R = U^2 / P_{max}$$

U : Switching threshold [V]
P_{max} : Peek power [W]
R: Resistance [Ohm]

Figure 7: Calculating the resistance R of an external braking resistor

If 2 or more braking resistors are connected to one drive, note the following criteria:

- The braking resistors must be connected in parallel or in series so the required resistance is reached. Only connect resistors with identical resistance in parallel in order to evenly distribute the load to all braking resistors.
- The total resistance of all external braking resistors connected to one drive must not fall below a lower limit.
- The continuous power of the network of connected braking resistors must be calculated. The result must be greater than or equal to the actually required continuous power.

Use only resistors that are specified as braking resistors. For suitable braking resistors, see Accessories, page 468.

Mounting and commissioning of an external braking resistor

A parameter is used to switch between the standard braking resistor and an external braking resistor. Test the function of the braking resistor under realistic conditions during commissioning, see page 141.

The external braking resistors listed in the Accessories chapter are shipped with an information sheet that provides details on installation. Note the degree of protection of the braking resistor and the ambient conditions at the installation site.

For information on the function and the electrical installation, see page 63.

0198441113956, V1.00, 07.2013

Wire ferrules: If you use wire ferrules, use only wire ferrules with collars for these terminals.

5.8.3 Rating information

To rate the braking resistor, calculate the proportion contributing to absorbing braking energy.

An external braking resistor is required if the kinetic energy that must be absorbed exceeds the possible total internal energy absorption.

Internal energy absorption

Braking energy is absorbed internally by the following mechanisms:

- DC bus capacitor E_{var}
- : Standard braking resistor E_l
- Electrical losses of the drive E_{el}
- Mechanical losses of the drive E_{mech}

The energy E_{var} is the square difference between the voltage before the deceleration process and the response threshold.

The voltage prior to the deceleration process depends on the mains voltage. The energy absorption by the DC bus capacitors is lowest when the mains voltage is highest. In the calculation, use the values for the highest mains voltage.

Standard braking resistor

Two characteristic values determine the energy absorption of the standard braking resistor.

- The continuous power P_{PR} is the amount of energy that can be continuously absorbed without overloading the braking resistor.
- The maximum energy E_{CR} limits the maximum short-term power that can be absorbed.

If the continuous power was exceeded for a specific time, the braking resistor must remain without load for a corresponding period.

The characteristic values P_{PR} and E_{CR} of the standard braking resistor can be found on page 42.

Electrical losses E_{el}

The electrical losses E_{el} of the drive system can be estimated on the basis of the peak power of the drive. The maximum power dissipation is approximately 10% of the peak power at a typical efficiency of 90%. If the current during deceleration is lower, the power dissipation is reduced accordingly.

Mechanical losses E_{mech}

The mechanical losses result from friction during operation of the system. Mechanical losses are negligible if the time required by the system to coast to a stop without a driving force is considerably longer than the time required to decelerate the system. The mechanical losses can be calculated from the load torque and the velocity from which the motor is to stop.

0198441113956, V1.00, 07.2013

Example Deceleration of a rotary motor with the following data:

- Initial speed of rotation: $n = 4000\ min^{-1}$
- Rotor inertia: $J_R = 4\ kgcm^2$
- Load inertia: $J_L = 6\ kgcm^2$
- Drive: $E_{var} = 23$ Ws, $E_{CR} = 80$ Ws, $P_{PR} = 10$ W

Calculation of the energy to be absorbed:

$$E_B = \frac{1}{2} J \cdot \left[\frac{2\pi n}{60}\right]^2$$

to $E_B = 88$ Ws. Electrical and mechanical losses are ignored.

In this example, the DC bus capacitors absorb $E_{var} = 23$ Ws (the value depends on the device type, see chapter "3 Technical Data").

The standard braking resistor must absorb the remaining 65 Ws. It can absorb a pulse of $E_{CR} = 80$ Ws. If the load is decelerated once, the standard braking resistor is sufficient.

If the deceleration process is repeated cyclically, the continuous output must be considered. If the cycle time is longer than the ratio of the energy to be absorbed E_B and the continuous power P_{PR}, the standard braking resistor is sufficient. If the system decelerates more frequently, the standard braking resistor is not sufficient.

In the example, the ration of E_B/P_{PR} is 8.8 s. An external braking resistor is required if the cycle time is shorter.

Rating the external braking resistor

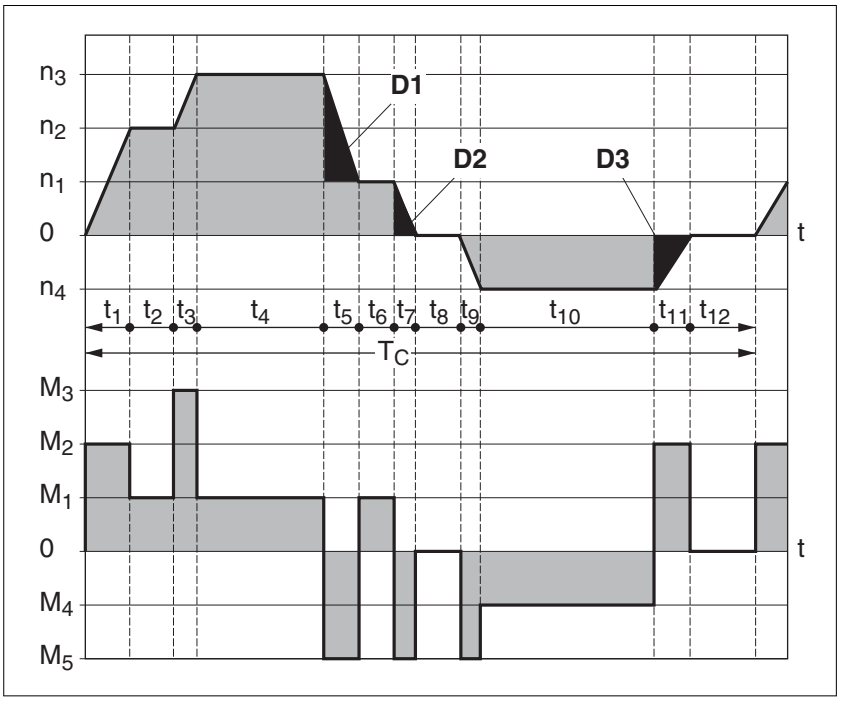

Figure 8: Characteristic curves for rating the braking resistor

0198441113956, V1.00, 07.2013

These two characteristics are also used for the rating the motor. The segments of the characteristic curves to be considered are designated by D_i (D_1 ... D_3).

The total inertia J_t must be known for the calculation of the energy at constant deceleration..

$J_t = J_m + J_c$

J_m: Motor inertia (with holding brake)
J_c: Load inertia

The energy for each deceleration segment is calculated as follows:

$$E_i = \frac{1}{2} J_t \cdot \omega_i^2 = \frac{1}{2} J_t \cdot \left[\frac{2\pi n_i}{60}\right]^2$$

Calculation for the segments (D_1) … (D_3):

$$E_1 = \frac{1}{2} J_t \cdot \left[\frac{2\pi(n_3 - n_1)}{60}\right]^2$$

$$E_2 = \frac{1}{2} J_t \cdot \left[\frac{2\pi n_1}{60}\right]^2$$

$$E_3 = \frac{1}{2} J_t \cdot \left[\frac{2\pi n_4}{60}\right]^2$$

Units: E_i in Ws (wattseconds), J_t in kgm^2, ω in rad and n_i in min^{-1}.

See the technical data for the energy absorption E_{var} of the devices (without consideration of a standard braking resistor or an external braking resistor).

In the next calculation steps, only consider those segments D_i, whose energy E_i exceeds the energy absorption of the device (see chapter "3.7 Braking resistorBraking resistor"). These excess energies E_{Di} must be diverted by means of the braking resistor (internal or external).

E_{Di} is calculated using the following formula:

$E_{Di} = E_i - E_{var}$ (in Ws)

The continuous power P_c is calculated for each machine cycle:

$$P_c = \frac{\sum E_{Di}}{\text{Cycletime}}$$

Units: P_c in [W], E_{Di} in [Ws] and cycle time T in [s]

0198441113956, V1.00, 07.2013

The selection is made in two steps:

- The maximum energy during deceleration must be less than the peak energy that the braking resistor can absorb: $(E_{Di})<(E_{Cr})$. In addition, the continuous power of the standard braking resistor must not be exceeded: $(P_C)<(P_{Pr})$. If these conditions are met, then the standard braking resistor is sufficient.
- If one of the conditions is not met, you must use an external braking resistor. The braking resistor must be rated in such a way that the conditions are met. The resistance of the braking resistor must be between the specified minimum and maximum values, since otherwise the load can no longer be decelerated or the product might be destroyed.

For order data for the external braking resistors, see chapter "12.4 External braking resistors".

0198441113956, V1.00, 07.2013

5.9 Safety function STO ("Safe Torque Off")

See chapter 32 for information on using the IEC 61508 standard.

5.9.1 Definitions

Safety function STO (IEC 61800-5-2)

The safety function STO ("Safe Torque Off") shuts off the motor torque safely. It is not necessary to interrupt the supply voltage. There is no monitoring for standstill.

Category 0 stop (IEC 60204-1)

Stopping by immediate removal of power to the machine actuators (i.e. an uncontrolled stop).

Category 1 stop (IEC 60204-1)

Controlled stop with power available to the machine actuators to achieve the stop. Power is not interrupted until the stop is achieved.

5.9.2 Function

The STO safety function integrated into the product can be used to implement an "EMERGENCY STOP" (IEC 60204-1) for category 0 stops. With an additional, approved EMERGENCY STOP safety relay module, it is also possible to implement category 1 stops.

Function principle

The STO safety function is triggered via 2 redundant inputs. The circuits of the two inputs must be separate so that there are two channels.

The switching process must be simultaneous for both inputs (offset <1s). The power stage is disabled and an error message is generated. The motor can no longer generate torque and coasts down without braking. A restart is possible after resetting the error message with a "Fault Reset".

The power stage is disabled and an error message is generated if only one of the two inputs is switched off or if the time offset is too great. This error message can only be reset by switching off the product.

0198441113956, V1.00, 07.2013

5.9.3 Requirements for using the safety function

⚠ ⚠ DANGER

ELECTRIC SHOCK CAUSED BY INCORRECT USE

The safety function STO (Safe Torque Off) does not cause electric isolation. The DC bus voltage is still present.

- Turn off the mains voltage using an appropriate switch to achieve a voltage-free condition.

Failure to follow these instructions will result in death or serious injury.

⚠ WARNING

LOSS OF SAFETY FUNCTION

Incorrect usage may cause a hazard due to the loss of the safety function.

- Observe the requirements for using the safety function.

Failure to follow these instructions can result in death or serious injury.

Special case: Safety function STO

The inputs for the safety function STO (inputs $\overline{\texttt{STO_A}}$ and $\overline{\texttt{STO_B}}$) are permanently set to logic type 1 (for source outputs).

Category 0 stop

During a category 0 stop, the motor coasts down in an uncontrolled way. If access to the machine coasting down involves a hazard (results of the hazard and risk analysis), you must take appropriate measures.

Category 1 stop

A controlled stop must be triggered with a category 1 stop. The controlled stop is not monitored by the drive system. In the case of power outage or an error, a controlled stop is impossible. Final shutoff of the motor is achieved by switching off the two inputs of the STO safety function. The shutoff is usually controlled by a standard EMERGENCY STOP safety relay module with a safe time delay.

Behavior of holding brake

Triggering the STO safety function means that the delay time for motors with holding brake is not effective. The motor cannot generate holding torque to bridge the time to application of the holding brake. Check whether additional measures have to be taken; for example, this may cause the load of vertical axes to lower.

Vertical axes, external forces

If external forces act on the motor (vertical axis) and an unwanted movement, for example caused by gravity, could cause a hazard, the motor must not be operated without additional measures for fall protection.

Unintended restart

To avoid unintended restart of the motor after restoration of power (for example, after power outage), the parameter `IO_AutoEnable` must be set to "off". Note that a master controller must not trigger an unintended restart.

Degree of protection when the safety function is used

You must ensure that conductive substances cannot get into the product (pollution degree 2). Conductive substances may cause the safety function to become inoperative.

0198441113956, V1.00, 07.2013

Protected cable installation

If short circuits and cross circuits can be expected in connection with safety-related signals and if they are not detected by upstream devices, protected cable installation as per ISO 13849-2 is required.

In the case of an unprotected cable installation, the two signals (both channels) of a safety function may be connected to external voltage if a cable is damaged. If the two channels are connected to external voltage, the safety function is no longer operative.

See chapter
"5.9.4 Protected cable installation for safety-related signals" for additional information.

Data for maintenance plan and safety calculations

The safety function must be requested and tested at regular intervals. The interval depends on the hazard and risk analysis of the total system. The minimum interval is 1 year (high demand mode as per IEC 61508).

Use the following data of the safety function STO for your maintenance plan and the safety calculations:

Lifetime of the safety function STO (IEC 61508) 1)	Years	20
SFF (IEC 61508) Safe Failure Fraction	[%]	90
HFT (IEC 61508) Hardware Fault Tolerance Type A subsystem		1
Safety integrity level IEC 61508 IEC 62061		 SIL3 SILCL3
PFH (IEC 61508) Probability of Dangerous Hardware Failure per Hour	[1/h] (FIT)	$4*10^{-9}$ (4)
PL (ISO 13849-1) Performance Level		e (category 3)
$MTTF_d$ (ISO 13849-1) Mean Time to Dangerous Failure	Years	100 (nominal 350)
DC (ISO 13849-1) Diagnostic Coverage	[%]	90

1) See chapter "13.2.1 Lifetime safety function STO".

Contact your local sales office for additional data, if required.

Hazard and risk analysis

As a system integrator you must conduct a hazard and risk analysis of the entire system. The results must be taken into account in the application of the safety function.

The type of circuit resulting from the analysis may differ from the following application examples. Additional safety components may be required. The results of the hazard and risk analysis have priority.

0198441113956, V1.00, 07.2013

5.9.4 Protected cable installation for safety-related signals

ISO 13849-2 describes protected cable installation for cables for safety-related signals. The cables for the safety function STO must be protected against external voltage. A shield with ground connection helps to keep external voltage away from the cables for the signals of the safety function STO.

Ground loops can cause problems in machines. A shield connected at one end only is sufficient for grounding and does not create a ground loop.

- Use shielded cables for the signals of the safety function STO.
- Do not use the cable for the signals of the safety function STO for other signals.
- Connect one end of the shield.
- When daisychaining the signals of the safety function STO, use the shield connection at STO IN.

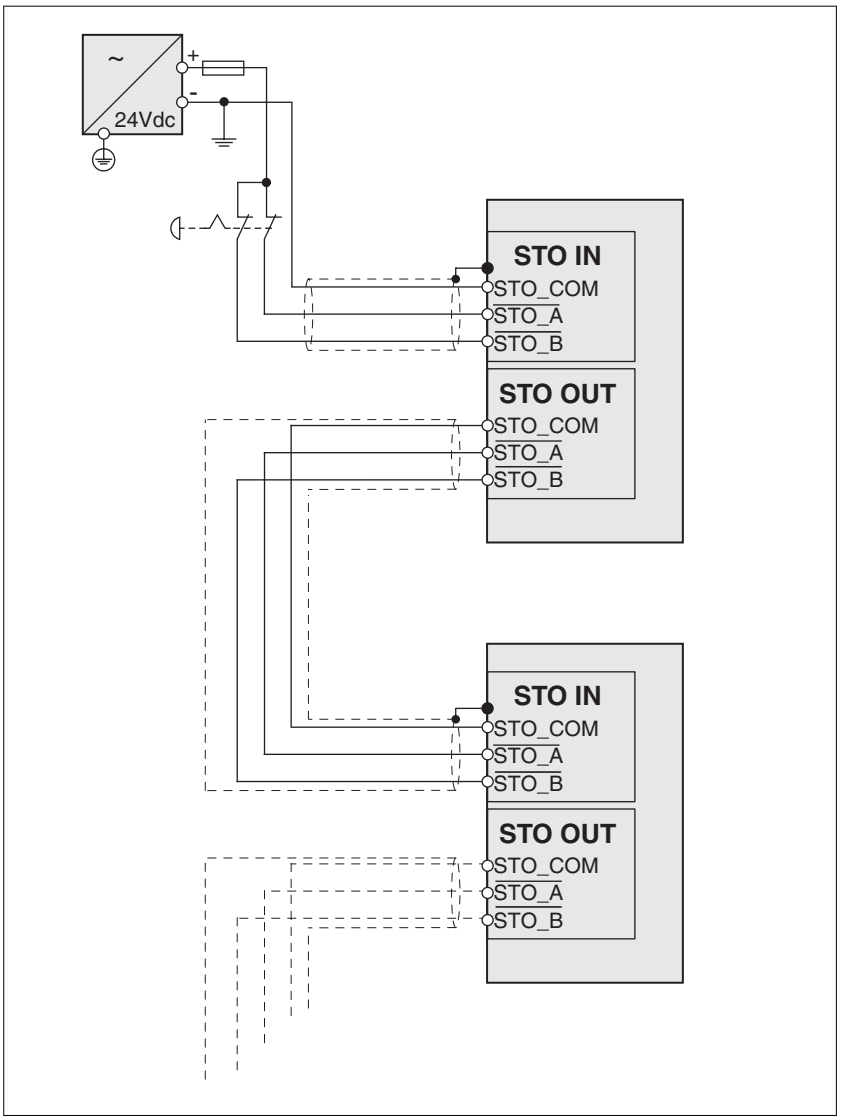

Figure 9: Example of protected cable installation for safety-related signals

0198441113956, V1.00, 07.2013

Notes on the connection modules

The connection modules are designed for connection of one end of the shield.

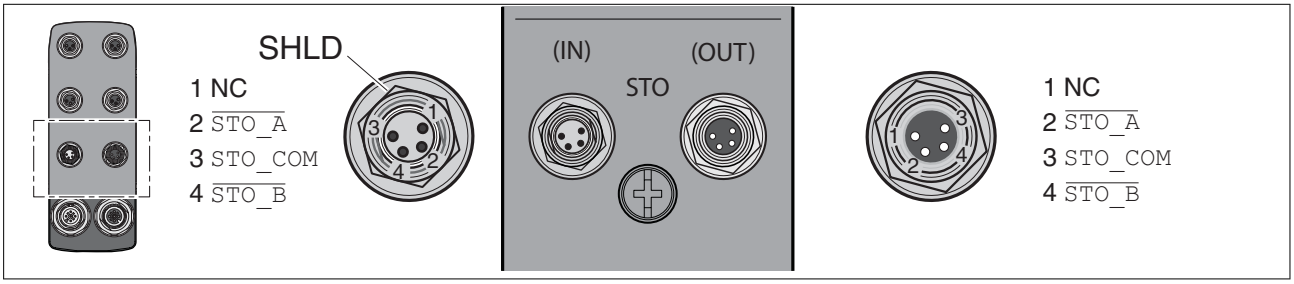

Figure 10: Example of connection of one end of shield at the I/O module with industrial connectors

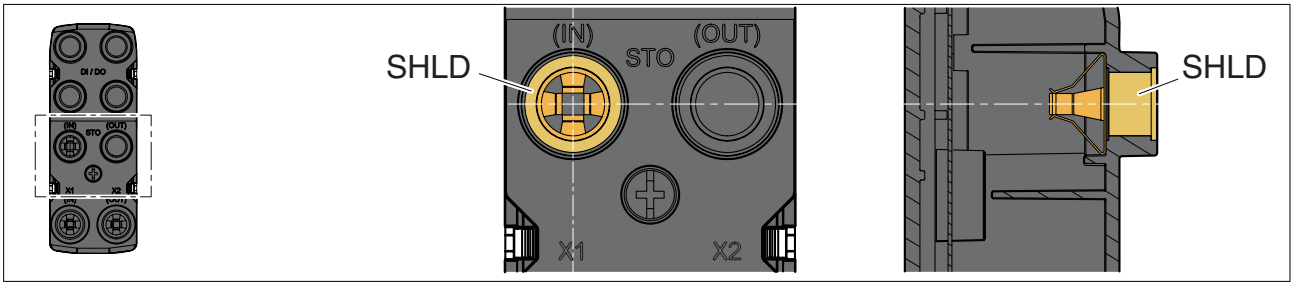

Figure 11: Example of connection of one end of shield at the I/O module with spring terminals

Accessories: cables and connectors for I/O module with industrial connectors

The accessories are designed for connection of one end of the shield. One end of the cables for the safety function STO is pre-assembled. The pre-assembled connector of the cables for the safety function STO is connected to STO IN. The connector for the safety function STO VW3L50010 is not connected to the shield; it is connected to STO OUT. One end of the shield of the pre-assembled cables VW3M94C is connected.

Use pre-assembled cables to reduce the risk of wiring errors. See chapter "12.9 Cables for safety function STO".

0198441113956, V1.00, 07.2013

5.9.5 Application examples STO

See chapter "6.3 Electrical installation" for a description of the connection assignment.

Example of category 0 stop

Use without EMERGENCY STOP safety relay module, category 0 stop.

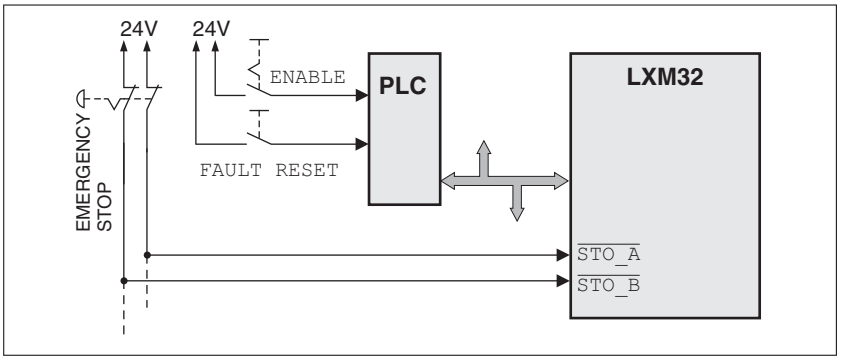

Figure 12: Example of category 0 stop

An EMERGENCY STOP is requested. This request leads to a category 0 stop

- The power stage is immediately disabled via the inputs $\overline{\text{STO_A}}$ and $\overline{\text{STO_B}}$ of the safety function STO. Power can no longer be supplied to the motor. If the motor has not yet stopped at this point in time, it coasts down in an uncontrolled way (uncontrolled stop).

0198441113956, V1.00, 07.2013

Example of category 1 stop Use with EMERGENCY STOP safety relay module, category 1 stop.

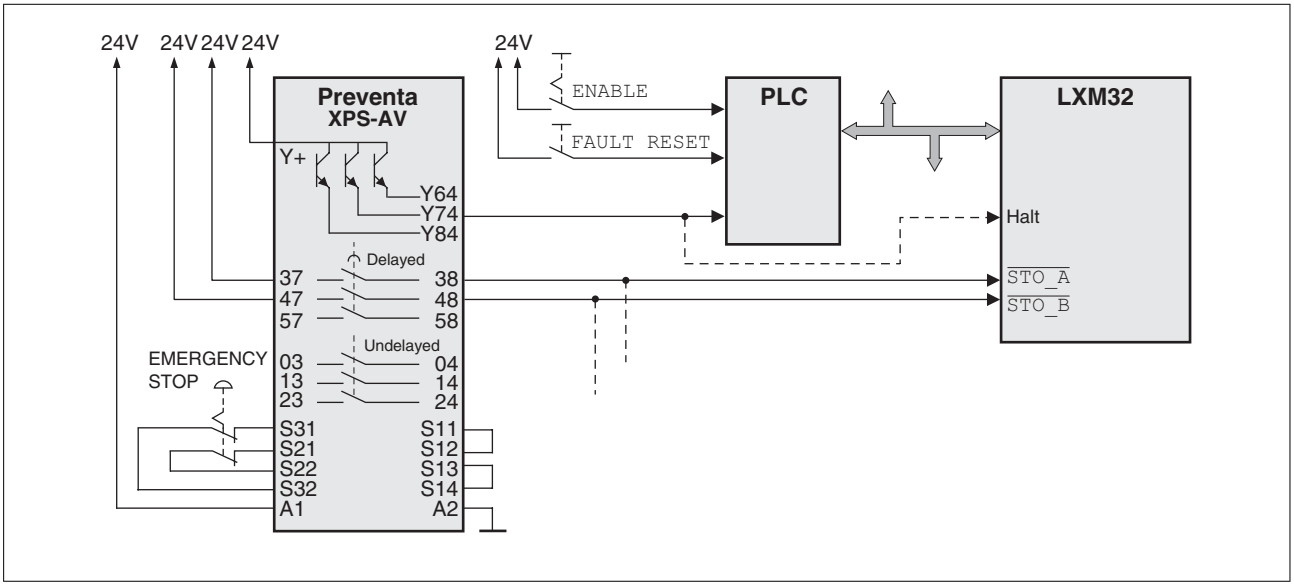

Figure 13: Example of category 1 stop with external Preventa XPS-AV EMERGENCY STOP safety relay module

An EMERGENCY STOP is requested. This request leads to a category 1 stop

- The function "Halt" is immediately started (undelayed) via the fieldbus or the input HALT (single-channel, not monitored). Any active movement is decelerated via the adjusted ramp.
- The power stage is disabled via the inputs STO_A and STO_B of the safety STO function after the delay time set in the EMERGENCY STOP safety relay module has elapsed. Power can no longer be supplied to the motor. If the motor has not yet stopped when the delay time has elapsed, it coasts down in an uncontrolled way (uncontrolled stop).

NOTE: The specified minimum current and the permissible maximum current of the relay outputs of the EMERGENCY STOP safety relay module must be observed.

See chapter "3.4 Signals" for the technical data of the STO inputs.

0198441113956, V1.00, 07.2013

5.10 Logic type

⚠ WARNING

UNINTENDED OPERATION

If logic type 2 (sink outputs) is used, a ground fault of a signal is detected as an On state.

- Use great care in wiring to exclude the possibility of ground faults.

Failure to follow these instructions can result in death, serious injury or equipment damage.

The digital inputs and outputs of this product can be wired for logic type 1 or logic type 2.

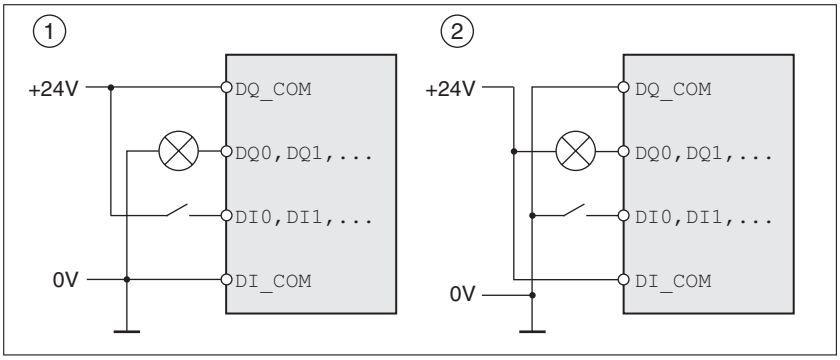

Figure 14: Logic type

Logic type	Active state
(1) Logic type 1	Output supplies current (source output) Current flows to the input
(2) Logic type 2	Output draws current (sink output) Current flows from the input

Signal inputs are protected against reverse polarity, outputs are short-circuit protected. The inputs and outputs are galvanically isolated.

Connection module with industrial connector

In the case of industrial connectors, the logic type is determined with the selection of the connection module.

Connection module with spring terminals

The logic type is determined by the wiring of `DI_COM` and `DQ_COM`, see Figure 14. The logic type affects wiring and control of the sensors; therefore, you must determine the required value in the engineering phase in view of the application.

Special case: Safety function STO

The inputs for the safety function STO (inputs $\overline{\texttt{STO_A}}$ and $\overline{\texttt{STO_B}}$) are permanently set to logic type 1 (for source outputs).

0198441113956, V1.00, 07.2013

5.11 Monitoring functions

The monitoring functions in the product can help to guard the system and reduce the risks involved in a system misoperation. These monitoring functions may not be used to protect persons.

The following monitoring functions are available:

Monitoring	Task
Data connection	Error response if the link becomes inoperative
Limit switch signals	Monitors for permissible movement range
Position deviation	Monitors for difference between actual position and reference position
Motor overload	Monitors for excessively high current in the motor phases
Overvoltage and undervoltage	Monitors for overvoltage and undervoltage of the power stage supply and the DC bus
Overtemperature	Monitors the device for overtemperature
I^2t limitation	Power limitation in the case of overloads for the motor, the output current, the output power and the braking resistor.
Commutation	Plausibility check of motor acceleration and effective torque
Mains phases	Monitoring for missing mains phases
Short circuit	Monitoring for short circuits between the motor phases

For a description of the monitoring functions, see chapter "8.7 Functions for monitoring movements".

0198441113956, V1.00, 07.2013

5.12 Configurable inputs and outputs

⚠ WARNING

LOSS OF CONTROL

The use of limit switches can provide some protection against hazards (for example, collision with mechanical stop caused by incorrect reference values).

- If possible, use the limit switches.
- Verify correct connection of the limit switches.
- Verify the correct installation of the limit switches. The limit switches must be mounted in a position far enough away from the mechanical stop to allow for an adequate stopping distance.
- You must release the limit switches before you can use them.
- Verify the correct function of the limit switches.

Failure to follow these instructions can result in death, serious injury or equipment damage.

This product has digital inputs and outputs that can be configured. The inputs and outputs have a defined standard assignment depending on the operating mode. This assignment can be adapted to the requirements of the customer's installation. See chapter "8.5.2 Setting the digital signal inputs and signal outputs" for additional information.

0198441113956, V1.00, 07.2013

5.13 Mounting types of the modules

Select the installation of the modules according to the required interfaces and the connection direction. Also note that the modules require space for mounting.

Mounting type with standard braking resistor

Mounting type A	Mounting type B
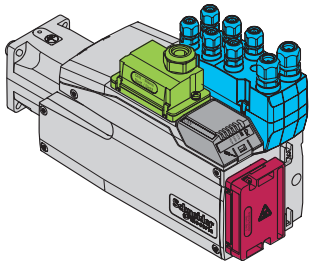	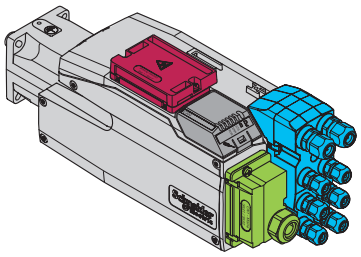
Module for supply voltage in slot 1 Standard braking resistor slot 2 I/O module in slot 3A	Module for supply voltage in slot 2 Standard braking resistor slot 1 I/O module in slot 3B

Mounting types with external braking resistor

Mounting type C	Mounting type D
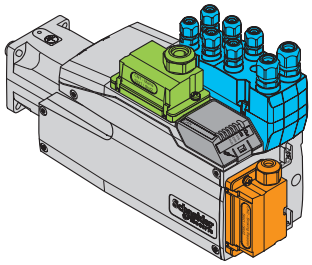	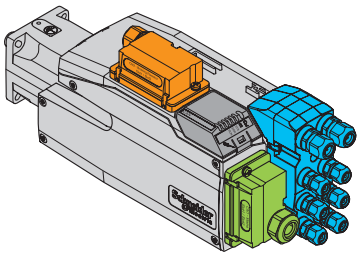
Module for supply voltage in slot 1 External braking resistor in slot 2 I/O module in slot 3A	Module for supply voltage in slot 2 External braking resistor in slot 1 I/O module in slot 3B

Mounting type E	Mounting type F
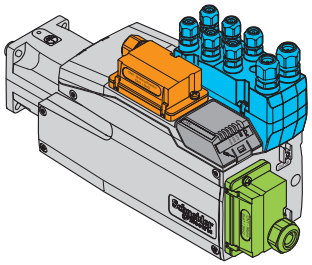	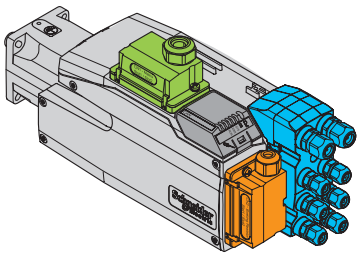
Module for supply voltage in slot 2 External braking resistor in slot 1 I/O module in slot 3A	Module for supply voltage in slot 1 External braking resistor in slot 2 I/O module in slot 3B

0198441113956, V1.00, 07.2013

0198441113956, V1.00, 07.2013

6 Installation

6

An engineering phase is mandatory prior to mechanical and electrical installation. See chapter "5 Engineering", page 53, for basic information.

Subject	Page
"6.1 Before mounting"	83
"6.2 Mounting the motor "	84
"6.3 Electrical installation"	87
"6.4 Checking installation"	116

⚠ WARNING

STRONG ELECTROMAGNETIC FIELDS

Motors can generate strong local electrical and magnetic fields. This can cause interference in sensitive devices.

- Keep persons with implants such as pacemakers away from the motor.
- Do not place any sensitive devices close to the motor.

Failure to follow these instructions can result in death, serious injury or equipment damage.

⚠ WARNING

UNEXPECTED BEHAVIOR CAUSED BY DAMAGE OR FOREIGN OBJECTS

Damage to the product as well as foreign objects, deposits or humidity can cause unexpected behavior.

- Do not use damaged products.
- Keep foreign objects from getting into the product.
- Verify correct seat of seals and cable entries.

Failure to follow these instructions can result in death, serious injury or equipment damage.

0198441113956, V1.00, 07.2013

⚠ WARNING

HOT SURFACES

The heat sink at the product may heat up to over 100°C (212°F) during operation.

- Avoid contact with the hot heat sink.
- Do not allow flammable or heat-sensitive parts in the immediate vicinity.
- Consider the measures for heat dissipation described.

Failure to follow these instructions can result in death or serious injury.

⚠ CAUTION

DAMAGE CAUSED BY IMPROPER APPLICATION OF FORCES

If the motor is improperly subjected to loads, it can be damaged or fall down.

- Do not step onto the motor.
- Avoid improper use by means of safeguards at the machine or safety instructions.

Failure to follow these instructions can result in injury or equipment damage.

0198441113956, V1.00, 07.2013

6.1 Before mounting

Checking for damage

Damaged products must neither be installed nor operated.

- Prior to mounting, check the product for visible damage. You must not use devices with damaged seals.

Checking the holding brake (option)

See chapter "13.2 Maintenance", "Checking/running in the holding brake".

Cleaning the shaft

The shaft extensions are factory-treated with an anti-corrosive. If output components are glued to the shaft, the anti-corrosive must be removed and the shaft cleaned. If required, use a grease removal agent as specified by the glue manufacturer. If the glue manufacturer does not provide information on grease removal, it is recommended to use acetone.

- Remove the anti-corrosive. Avoid direct contact of the skin and the sealing material with the anti-corrosive or the cleaning agent.

Mounting surface for flange

The mounting surface must be stable, clean, deburred and low-vibration.

- Verify that the system side meets all requirements in terms of dimensions and tolerances.

0198441113956, V1.00, 07.2013

6.2 Mounting the motor

To install a drive in locations difficult to access, it may be useful to carry out the electrical installation first and then install the fully wired drive.

⚠ WARNING

UNEXPECTED MOVEMENT CAUSED BY ELECTROSTATIC DISCHARGE

In rare cases, electrostatic discharge to the shaft may cause incorrect operation of the encoder system and result in unexpected motor movements and damage to the bearing.

- Use conductive components (such as antistatic belts) or other suitable measures to avoid static charge by motion.

Failure to follow these instructions can result in death, serious injury or equipment damage.

⚠ WARNING

UNEXPECTED MOVEMENT

If the permissible ambient conditions are exceeded, external substances from the environment may penetrate and cause unexpected movement or equipment damage.

- Verify that the ambient conditions are met.
- Do not allow seals to run dry.
- Keep liquids from getting to the shaft bushing (for example in mounting position IM V3).
- Do not expose the shaft sealing rings and cable entries to the direct spray of a pressure washer.

Failure to follow these instructions can result in death, serious injury or equipment damage.

⚠ WARNING

UNINTENDED BEHAVIOR CAUSED BY MECHANICAL DAMAGE TO THE MOTOR

If the maximum permissible forces at the shaft are exceeded, this will result in premature wear of the bearing, shaft breakage or damage to the encoder.

- Do not exceed the maximum permissible axial and radial forces.
- Protect the shaft from impact.
- Do not exceed the maximum permissible axial force when pressing on components.

Failure to follow these instructions can result in death, serious injury or equipment damage.

0198441113956, V1.00, 07.2013

⚠ WARNING

GREAT MASS OR FALLING PARTS

The motor can have an unexpectedly great mass.

- Consider the mass of the motor when mounting it. It may be necessary to use a suitable crane.
- Use personal protective equipment (for example, safety shoes and protective gloves).
- Mount the motor in such a way (tightening torque, securing screws) that it cannot come loose even in the case of fast acceleration or continuous vibration.

Failure to follow these instructions can result in death, serious injury or equipment damage.

Use a ball head hex key. This way, the mounting screws at the flange are easier to access.

Mounting distances, ventilation

When selecting the position of the device, note the following:

- No minimum distances are required for installation. However, note that the motor can become very hot.
- Mount the device in such a way that free convection is possible. Free convection is required for cooling the device.
- Avoid heat accumulations.
- Do not obstruct the ventilation slots; keep dirt from reaching the ventilation slots.
- Do not mount the device close to heat sources. Mutual heating of several devices leads to derating.
- Do not mount the device on flammable materials.
- The heated airflow from other devices and components must not heat up the air used for cooling the device.
- If the thermal limits are exceeded during operation, the drive switches off (overtemperature).

Convection channels

The convection channels featured by size 100 increase the heat dissipation. Do not obstruct the convection channels so that there is no derating.

Mounting position

The following mounting positions are defined and approved as per IEC 60034-7:

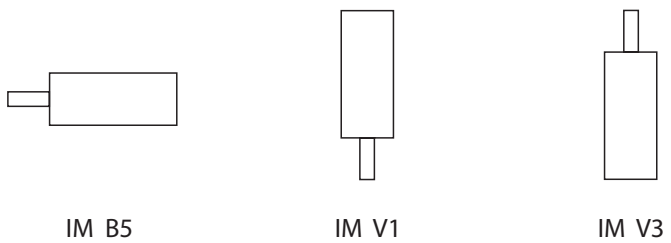

Mounting

When the motor is mounted to the mounting surface, it must be accurately aligned (axially and radially) and evenly contact the surface. All

0198441113956, V1.00, 07.2013

mounting screws must be tightened with the specified torque. There must be no tension. See chapter "3 Technical Data" for data, dimensions and degrees of protection.

Mounting output components

If output components are not properly mounted, the motor may be damaged. Output components such as pulleys, couplings must be mounted with suitable equipment and tools. The maximum axial and radial forces acting on the shaft must not exceed the maximum shaft load values specified, see "3.6.2.2 Shaft load".

Observe the mounting instructions provided by the manufacturer of the output component. Motor and output component must be accurately aligned both axially and radially. Failure to follow the instructions will cause runout, damage to the rolling bearings and premature wear.

0198441113956, V1.00, 07.2013

6.3 Electrical installation

⚠ ⚠ DANGER

ELECTRIC SHOCK CAUSED BY FOREIGN OBJECTS OR DAMAGE

Conductive foreign objects in the product or damage may cause parasitic voltage.

- Do not use damaged products.
- Keep foreign objects such as chips, screws or wire clippings from getting into the product.

Failure to follow these instructions will result in death or serious injury.

⚠ ⚠ DANGER

ELECTRIC SHOCK

Opening the side wall exposes hazardous voltages and damages the insulation.

- Do not open the side wall.

Failure to follow these instructions will result in death or serious injury.

⚠ ⚠ DANGER

ELECTRIC SHOCK CAUSED BY INCORRECT POWER SUPPLY UNIT

The `+24VDC` supply voltage is connected with many exposed signal connections in the drive system.

- Use a power supply unit that meets the PELV (Protective Extra Low Voltage) requirements.
- Connect the negative output of the power supply unit to PE (ground).

Failure to follow these instructions will result in death or serious injury.

0198441113956, V1.00, 07.2013

6.3.1 Ground connection

⚠ ⚠ DANGER

ELECTRIC SHOCK CAUSED BY INSUFFICIENT GROUNDING

This product has an increased leakage current >3.5 mA.

- Use a protective ground conductor at with least 10 mm^2 (AWG 6) or two protective ground conductors with the cross section of the conductors supplying the power terminals. Verify compliance with all local and national electrical code requirements as well as all other applicable regulations with respect to grounding of all equipment.

Failure to follow these instructions will result in death or serious injury.

Connecting to ground

The ground connection is located at the top of the motor flange.

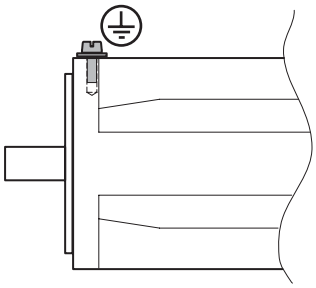

- Connect the ground connection to the central grounding point of the system.

Tightening torque grounding screw M4	[Nm (lb•in)]	2.9 (25.7)
Property class of grounding screw	H	8.8

0198441113956, V1.00, 07.2013

6.3.2 Mounting LXM32i

NOTICE

DESTRUCTION DUE TO ESD

Electrostatic discharge (ESD) can cause immediate or later destruction of the module or the device.

- Use suitable ESD measures (IEC 61340-5-2) when handling the module.
- Do not touch any internal components.

Failure to follow these instructions can result in equipment damage.

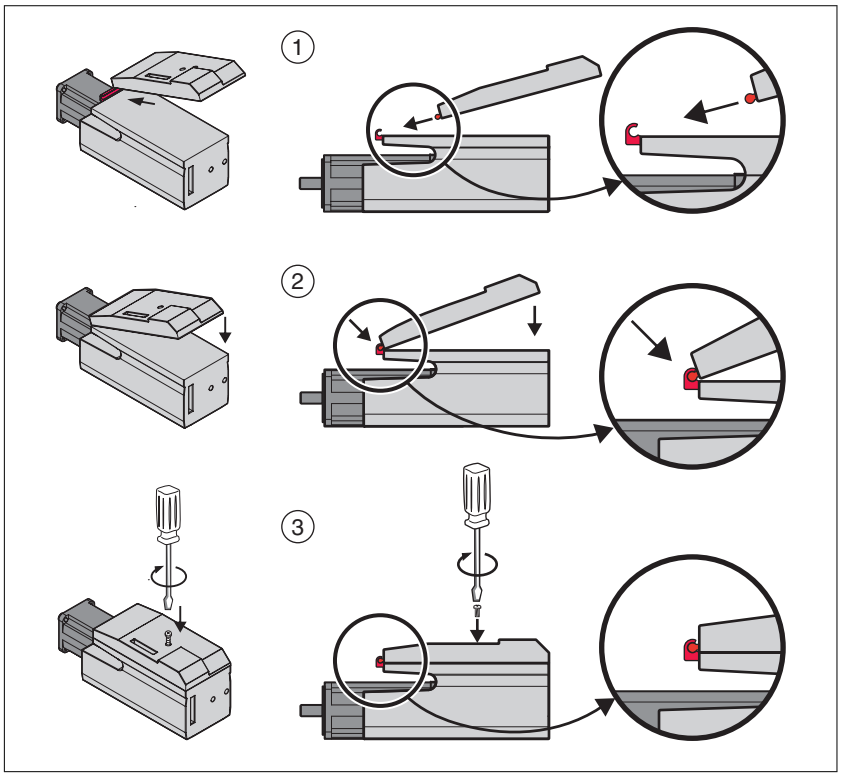

Figure 15: Mounting LXM32i

- Remove the transport lock.
- Check the seals for damage. You must not use devices with damaged seals.
- (1) Plug the LXM32i onto the BMi.
- (2) The catch must snap in properly.
- (3) Fasten the LXM32i by tightening the fastening screw.

Note the specified tightening torque see chapter "3.9 Tightening torque and screws".

0198441113956, V1.00, 07.2013

6.3.3 I/O module with industrial connectors

6.3.3.1 Overview I/O module with industrial connectors

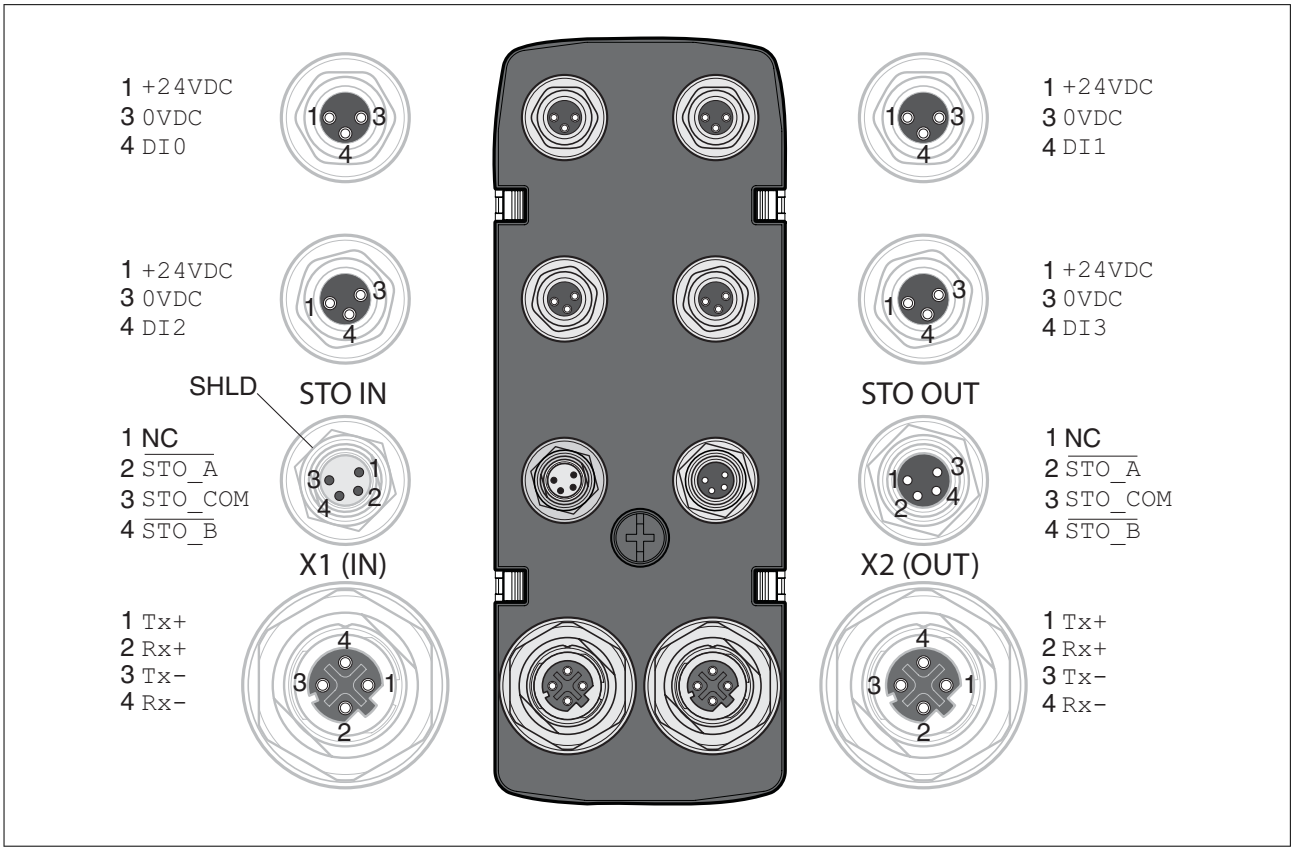

Figure 16: Connection overview I/O module with industrial connectors

Signal	Meaning	Factory settings [1]	I/O
+24VDC	24 V signal power supply (see "Internal 24V signal power supply ", page 30)	-	O
0VDC	Reference potential to +24VDC	-	-
DI0	Digital input 0	Positive Limit Switch (LIMP)	I
DI1	Digital input 1	Negative Limit Switch (LIMN)	I
DI2	Digital input 2	Reference Switch (REF)	I
DI3	Digital input 3	Freely Available	I
$\overline{\text{STO_A}}$	Safety function STO [2]	-	I
STO_COM	Reference potential for safety function STO [2]	-	I
$\overline{\text{STO_B}}$	Safety function STO [2]	-	I
SHLD	Shield (grounded internally)	-	-
Tx+	Ethernet transmit signal +	-	I/O
Tx-	Ethernet transmit signal -	-	I/O
Rx+	Ethernet receive signal +	-	I/O
Rx-	Ethernet receive signal -	-	I/O
NC	Not connected	-	-

1) See "7.5.3 Digital inputs / outputs", page 144.
2) This module requires an external supply for the safety function STO; see the information in chapter "5.9 Safety function STO ("Safe Torque Off")", page 69.

0198441113956, V1.00, 07.2013

6.3.3.2 Logic type

The logic type depends on the product version of the I/O module.

See chapters
"12.5 I/O module with industrial connector for logic type 1 (source)" and "12.6 I/O module with industrial connector for logic type 2 (sink)" for an overview of the available product versions.

See chapter "5.10 Logic type" for additional information on the logic types.

6.3.3.3 Connection of the digital inputs

The I/O module with industrial connector is available in the following product versions:

- I/O module with 2 signal inputs
- I/O module with 4 signal inputs

Cable specifications

See chapter "5.2.1 Overview of the required cables" for information on the required cables.

Shield	-
Twisted pair	-
PELV:	Required
Cable composition:	-
Minimum cable diameter: For UL:	2.5 mm 5 mm
Maximum cable diameter	6.5 mm
Maximum cable length:	30 m
Special features:	-

Connecting the digital inputs

- ▸ Verify that wiring, cables and connected interfaces meet the PELV requirements.
- ▸ Connect the digital inputs.
- ▸ Note the specified tightening torque see chapter "3.9 Tightening torque and screws".
- ▸ Close unused industrial connectors with a plug.

0198441113956, V1.00, 07.2013

6.3.3.4 Connection of safety function STO

⚠ WARNING

LOSS OF SAFETY FUNCTION

Incorrect usage may cause a hazard due to the loss of the safety function.

- Observe the requirements for using the safety function.

Failure to follow these instructions can result in death or serious injury.

The I/O module with industrial connector is available in the following product versions:

- I/O module without safety function STO
- I/O module with safety function STO

See chapter "5.9 Safety function STO ("Safe Torque Off")" for additional information on the safety function STO.

Operation without safety function STO

If you do not want to use the safety function STO, you must use an I/O module without the safety function STO.

The safety function STO is deactivated in the case of I/O modules without safety function STO.

Operation with safety function STO

If you want to use the safety function STO, you must use an I/O module with the safety function STO.

Cable specifications

See chapter "5.2.1 Overview of the required cables" for information on the required cables.

Shield	Required, one end grounded
Twisted pair	-
PELV:	Required
Cable composition:	-
Minimum cable diameter: For UL:	2.5 mm 5 mm
Maximum cable diameter	6.5 mm
Maximum cable length:	-
Special features:	-

Connecting the safety function STO

- ▸ Verify that wiring, cables and connected interfaces meet the PELV requirements.
- ▸ Connect the safety function in accordance with the specifications in chapter "5.9 Safety function STO ("Safe Torque Off")".
- ▸ Note the specified tightening torque see chapter "3.9 Tightening torque and screws".
- ▸ Close unused industrial connectors with a plug.

0198441113956, V1.00, 07.2013

6.3.3.5 Fieldbus connection

Topology

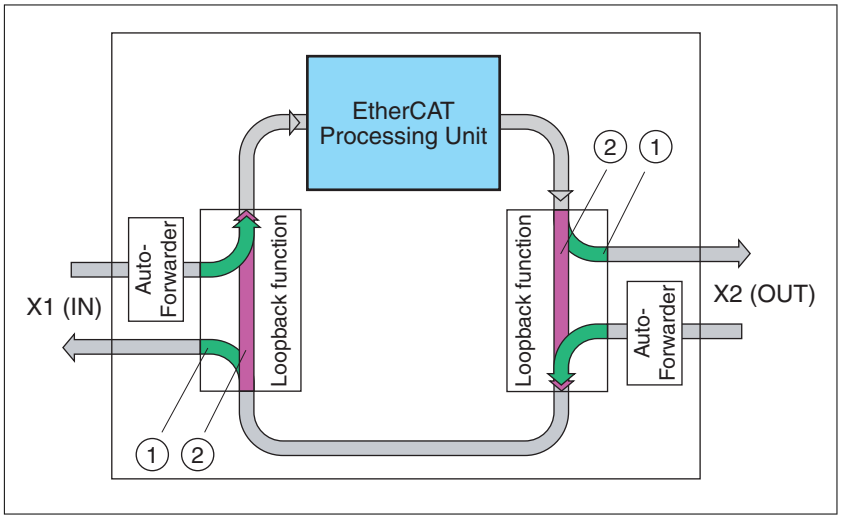

Figure 17: Topology

(1) Port open
(2) Port closed

Cable specifications

See chapter "5.2.1 Overview of the required cables" for information on the required cables.

Shield	Required, both ends grounded
Twisted pair	Required
PELV:	Required
Cable composition:	8 * 0.25 mm² (8 * AWG 22)
Minimum cable diameter: For UL:	2.5 mm 5 mm
Maximum cable diameter	6.5 mm
Maximum cable length:	100 m
Special features:	Cat 5e, no crossover cable

Connecting the fieldbus

- Verify that wiring, cables and connected interfaces meet the PELV requirements.
- Connect the safety function in accordance with the specifications in chapter "5.9 Safety function STO ("Safe Torque Off")".
- Note the specified tightening torque see chapter "3.9 Tightening torque and screws".
- Close unused industrial connectors with a plug.

0198441113956, V1.00, 07.2013

6.3.4 I/O module with spring terminals

6.3.4.1 Opening the I/O module

- Remove the blind plugs at the required connections.
- Open the I/O module.

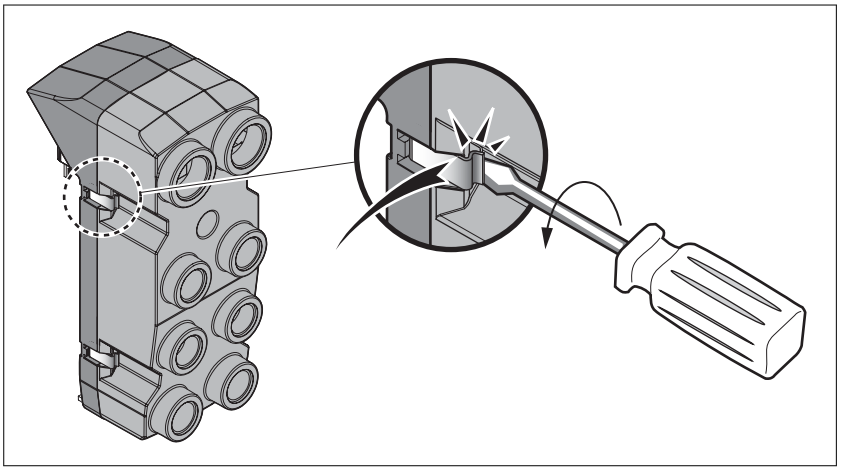

Figure 18: Opening the I/O module with spring terminals

- Screw the required cable glands into the I/O module.

  Cable glands are available as accessories, see chapter "12 Accessories and spare parts".

Use genuine accessories or cable glands with a degree of protection of at least IP65 (form sealing ring or flat sealing ring required).

Note the specified tightening torque see chapter "3.9 Tightening torque and screws".

0198441113956, V1.00, 07.2013

6.3.4.2 Overview I/O module with spring terminals

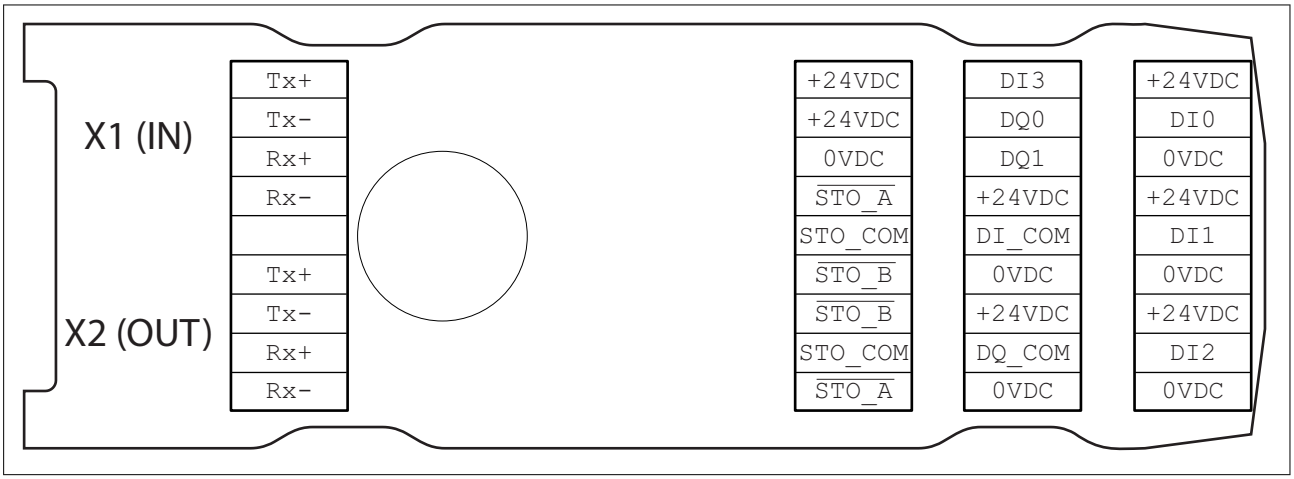

Figure 19: Overview I/O module with spring terminals

Signal	Meaning	Factory settings [1]	I/O
+24VDC	24 V signal power supply (see "Internal 24V signal power supply ", page 30)	-	O
0VDC	Reference potential to +24VDC	-	-
DI0	Digital input 0	Positive Limit Switch (LIMP)	I
DI1	Digital input 1	Negative Limit Switch (LIMN)	I
DI2	Digital input 2	Reference Switch (REF)	I
DI3	Digital input 3	Freely Available	I
DQ0	Digital output 0	No Fault	O
DQ1	Digital output 1	Active	O
DI_COM	Reference potential for digital inputs	-	-
DQ_COM	Reference potential for digital outputs	-	-
$\overline{\text{STO_A}}$	Safety function STO	-	I
STO_COM	Reference potential for STO	-	I
$\overline{\text{STO_B}}$	Safety function STO	-	I
SHLD	Shield (grounded internally)	-	-
Tx+	Ethernet transmit signal +	-	I/O
Tx-	Ethernet transmit signal -	-	I/O
Rx+	Ethernet receive signal +	-	I/O
Rx-	Ethernet receive signal -	-	I/O

1) See "7.5.3 Digital inputs / outputs", page 144.

0198441113956, V1.00, 07.2013

6.3.4.3 Setting the logic type

The I/O module with spring terminals supports logic type 1 and logic type 2.

See chapter "5.10 Logic type" for additional information on the logic types.

- In the case of logic type 1, the signal `DI_COM` and `0VDC` must be bridged and the signal `DQ_COM` and `+24VDC` must be bridged.
- In the case of logic type 2, the signal `DI_COM` and `+24VDC` must be bridged and the signal `DQ_COM` and `0VDC` must be bridged.
- ▸ Set the required logic type.

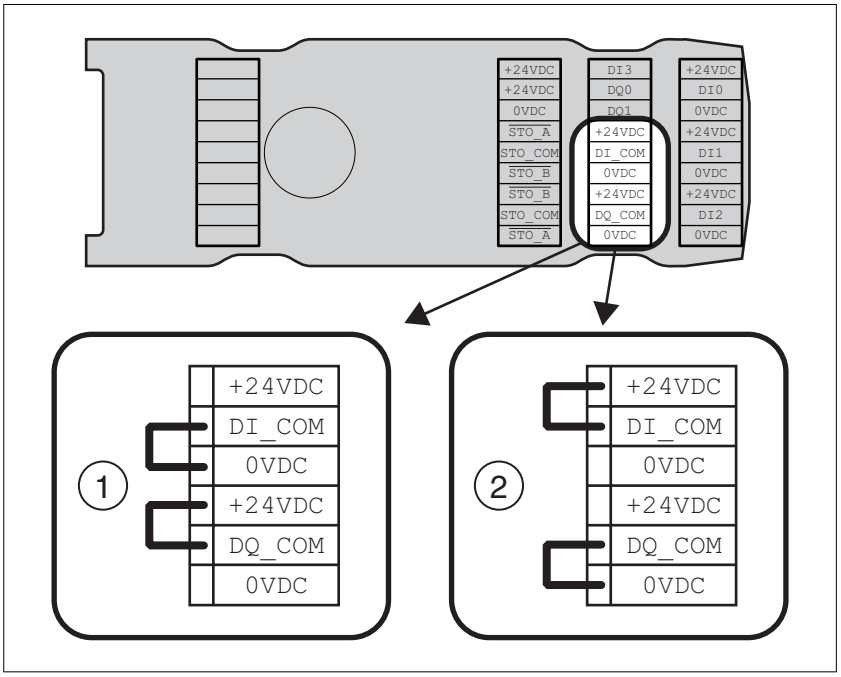

Figure 20: Setting the logic type

(1) Logic type 1

(2) Logic type 2

0198441113956, V1.00, 07.2013

6.3.4.4 Connecting the digital inputs/outputs

Cable specifications

See chapter "5.2.1 Overview of the required cables" for information on the required cables.

Shield	-
Twisted pair	-
PELV:	Required
Cable composition:	-
Minimum cable diameter: For UL:	2.5 mm 5 mm
Maximum cable diameter	6.5 mm
Maximum cable length:	30 m
Special features:	-

Properties of the connection terminals

Connection cross section (rigid)	[mm²]	0.13 ... 1.3 (AWG 26 ... AWG 16)
Connection cross section (wire)	[mm²]	0.2 ... 0.52 (AWG 24 ... AWG 20)
Stripping length	[mm]	8 ... 9

The terminals are approved for wires and rigid conductors. Observe the maximum permissible connection cross section. Take into account the fact that wire ferrules increase the connection cross section.

Pin assignment

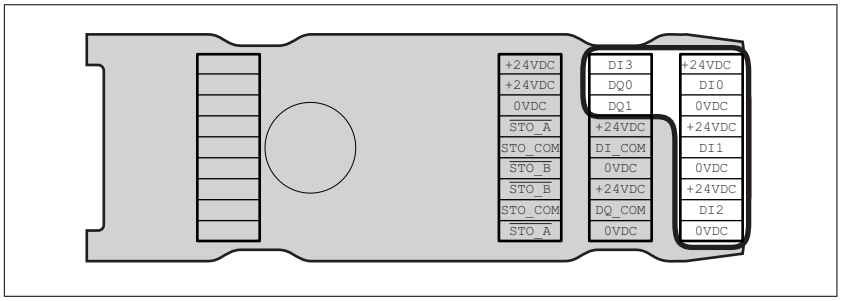

Figure 21: Pin assignment

Signal	Meaning
DI0	Digital input 0
DI1	Digital input 1
DI2	Digital input 2
DI3	Digital input 3
DQ0	Digital output 0
DQ1	Digital output 1
+24VDC	24 V signal power supply (see "Internal 24V signal power supply ", page 30)
0VDC	Reference potential to DI0 ... DI3, DQ0 and DQ1

0198441113956, V1.00, 07.2013

Assembling cables

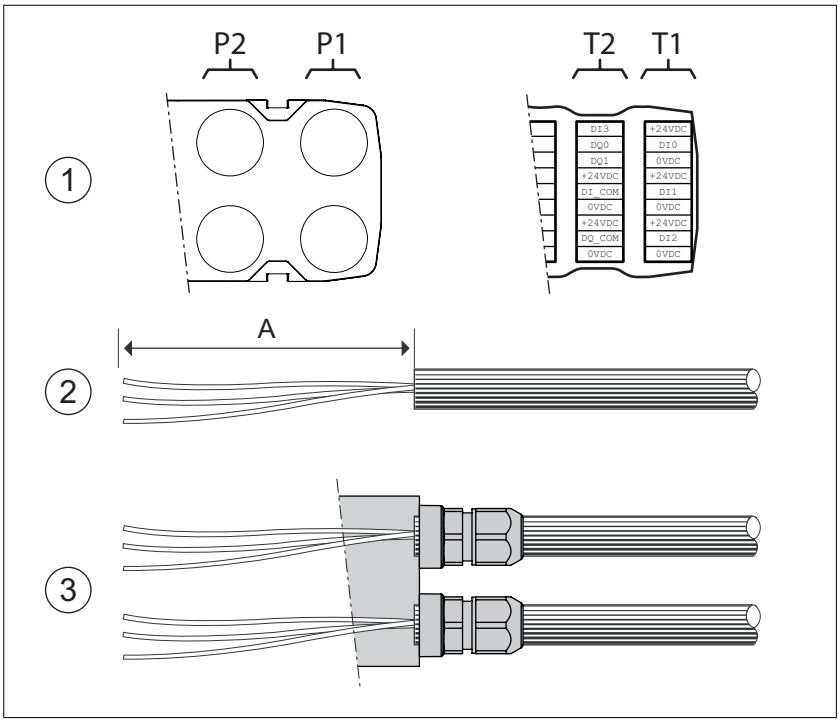

Figure 22: Assembling cables

From cable gland ...	... to terminal block	Length A
P1	T1	120 mm
P1	T2	105 mm
P2	T1	145 mm
P2	T2	130 mm

- (1) Decide which signals are to be routed through which cable gland.
- (2) Strip the cable jackets, length A.
- (3) Push the compression nut of the cable gland over the cable.

  Push the cable through the cable gland and tighten the compression nut.

0198441113956, V1.00, 07.2013

6.3.4.5 Connection of safety function STO

⚠ WARNING

LOSS OF SAFETY FUNCTION

Incorrect usage may cause a hazard due to the loss of the safety function.

- Observe the requirements for using the safety function.

Failure to follow these instructions can result in death or serious injury.

The I/O module with spring terminals supports operation without safety function STO and operation without safety function STO.

See chapter "5.9 Safety function STO ("Safe Torque Off")" for additional information on the safety function STO.

Operation without STO

If the safety function STO is not to be used, the signal $\overline{\text{STO_A}}$ and +24VDC must be bridged, the signal $\overline{\text{STO_B}}$ and +24VDC must be bridged and the signal STO_COM and 0VDC must be bridged.

The safety function STO is deactivated when the signals are bridged.

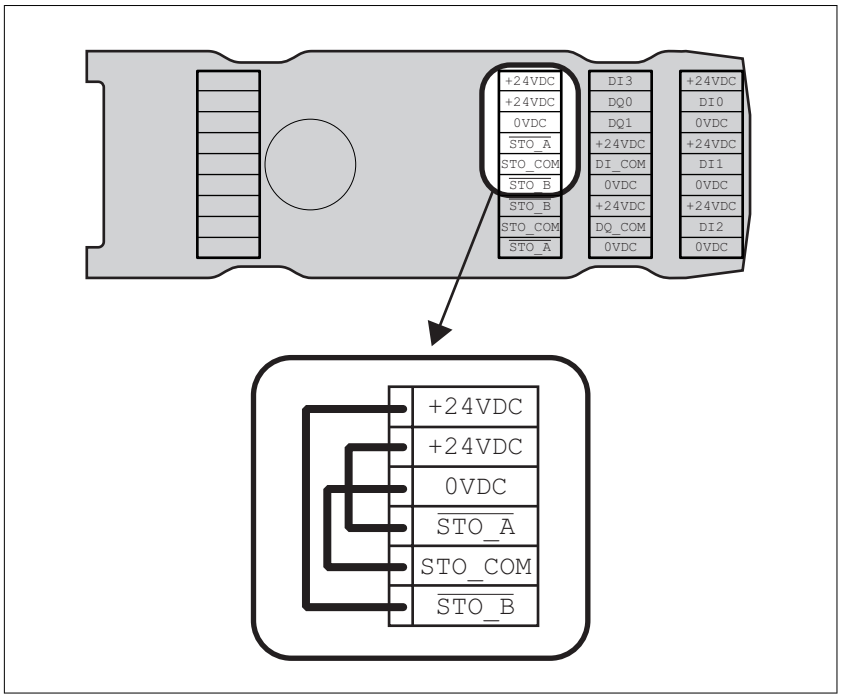

Figure 23: Operation without STO

Operation with safety function STO

If the safety function STO is to be used, the safety function STO must be connected in accordance with the specifications in chapter "5.9 Safety function STO ("Safe Torque Off")".

0198441113956, V1.00, 07.2013

Cable specifications

See chapter "5.2.1 Overview of the required cables" for information on the required cables.

Shield	Required, one end grounded
Twisted pair	-
PELV:	Required
Cable composition:	-
Minimum cable diameter: For UL:	2.5 mm 5 mm
Maximum cable diameter	6.5 mm
Maximum cable length:	-
Special features:	-

Properties of the connection terminals

Connection cross section (rigid)	[mm²]	0.13 ... 1.3 (AWG 26 ... AWG 16)
Connection cross section (wire)	[mm²]	0.2 ... 0.52 (AWG 24 ... AWG 20)
Stripping length	[mm]	8 ... 9

The terminals are approved for wires and rigid conductors. Observe the maximum permissible connection cross section. Take into account the fact that wire ferrules increase the connection cross section.

Pin assignment

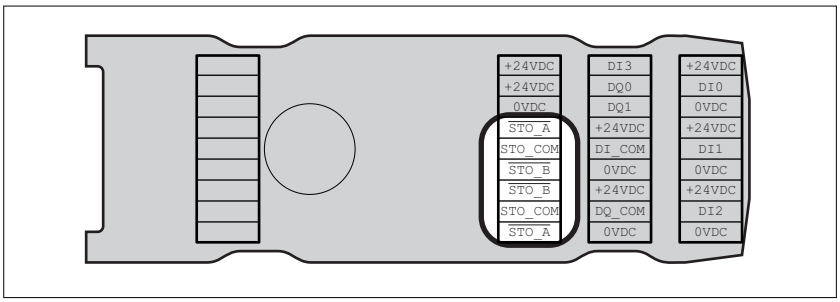

Figure 24: Pin assignment

Signal	Meaning
$\overline{\text{STO_A}}$	Safety function STO: Dual-channel connection, connection A
$\overline{\text{STO_B}}$	Safety function STO: Dual-channel connection, connection B
STO_COM	Reference potential to $\overline{\text{STO_A}}$ and $\overline{\text{STO_B}}$

Shield concept

The shield of the cables for the safety function STO must be connected to the connection STO IN (one end). Connecting one end of the shield helps to avoid ground loops.

See chapter
"5.9.4 Protected cable installation for safety-related signals" for additional information.

0198441113956, V1.00, 07.2013

Assembling cables

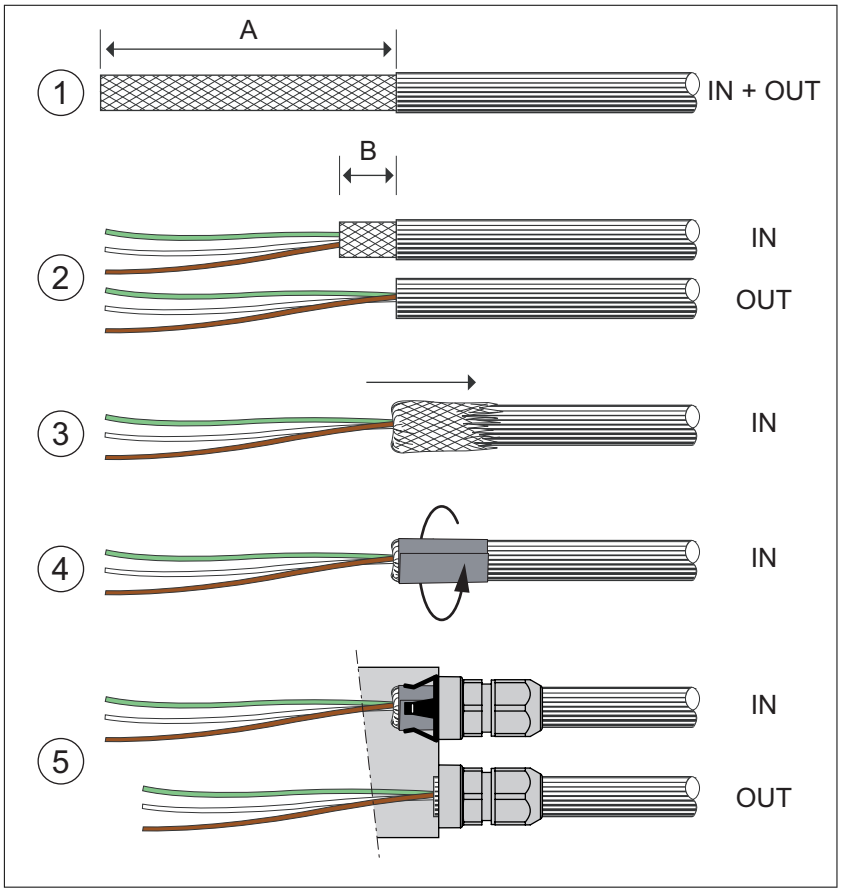

Figure 25: Assembling cables

Length A	mm	150
Length B	mm	10

- (1) Strip the cable jacket, length A.
- (2) Shorten the shield of the cable for STO_IN to length B. Completely shorten the shield of the cable for STO_OUT.
- (3) Slide the shield braiding back over the cable jacket.
- (4) Recommendation: Fasten the shield with shield foil. Recommended size: 50 mm long, 10 mm wide.
- (5) Push the compression nut of the cable gland over the cable.

  Push the cable through the cable gland and tighten the compression nut. Verify that the shield is connected to the shield clip.

Connecting the safety function STO

- Verify that wiring, cables and connected interfaces meet the PELV requirements.
- Connect the safety function in accordance with the specifications in chapter "5.9 Safety function STO ("Safe Torque Off")".

0198441113956, V1.00, 07.2013

6.3.4.6 Fieldbus connection

Topology

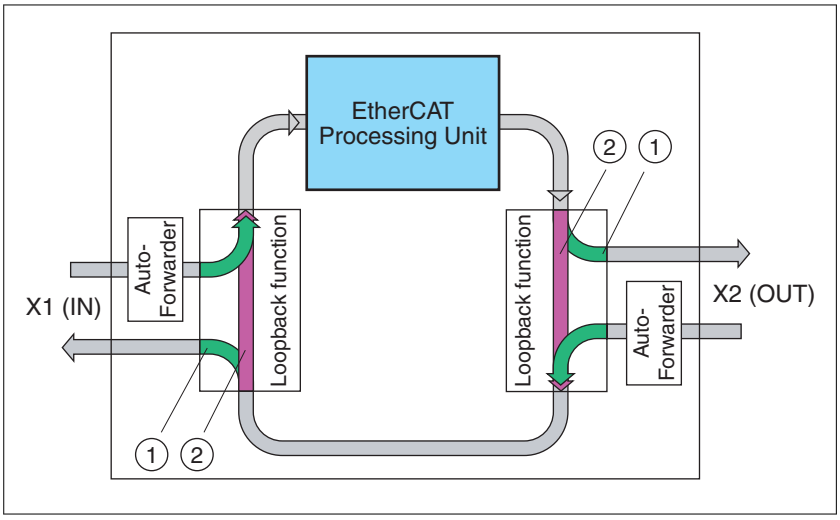

Figure 26: Topology

(1) Port open
(2) Port closed

Cable specifications

See chapter "5.2.1 Overview of the required cables" for information on the required cables.

Shield	Required, both ends grounded
Twisted pair	Required
PELV:	Required
Cable composition:	8 * 0.25 mm² (8 * AWG 22)
Minimum cable diameter: For UL:	2.5 mm 5 mm
Maximum cable diameter	6.5 mm
Maximum cable length:	100 m
Special features:	Cat 5e, no crossover cable

Properties of the connection terminals

Connection cross section (rigid)	[mm²]	0.13 ... 1.3 (AWG 26 ... AWG 16)
Connection cross section (wire)	[mm²]	0.2 ... 0.52 (AWG 24 ... AWG 20)
Stripping length	[mm]	8 ... 9

The terminals are approved for wires and rigid conductors. Observe the maximum permissible connection cross section. Take into account the fact that wire ferrules increase the connection cross section.

Pin assignment

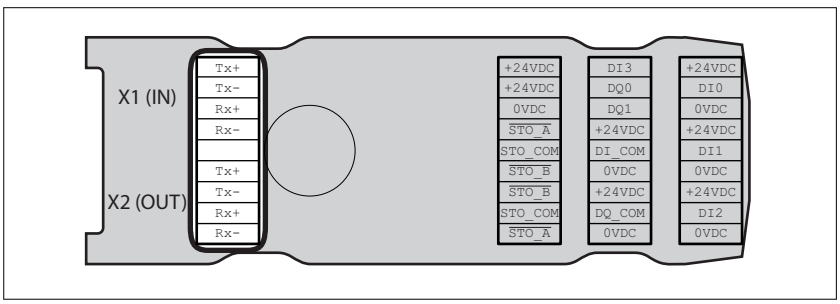

Figure 27: Pin assignment

0198441113956, V1.00, 07.2013

Signal	Meaning
Tx+	Ethernet transmit signal +
Tx-	Ethernet transmit signal -
Rx+	Ethernet receive signal +
Rx-	Ethernet receive signal -

Assembling cables

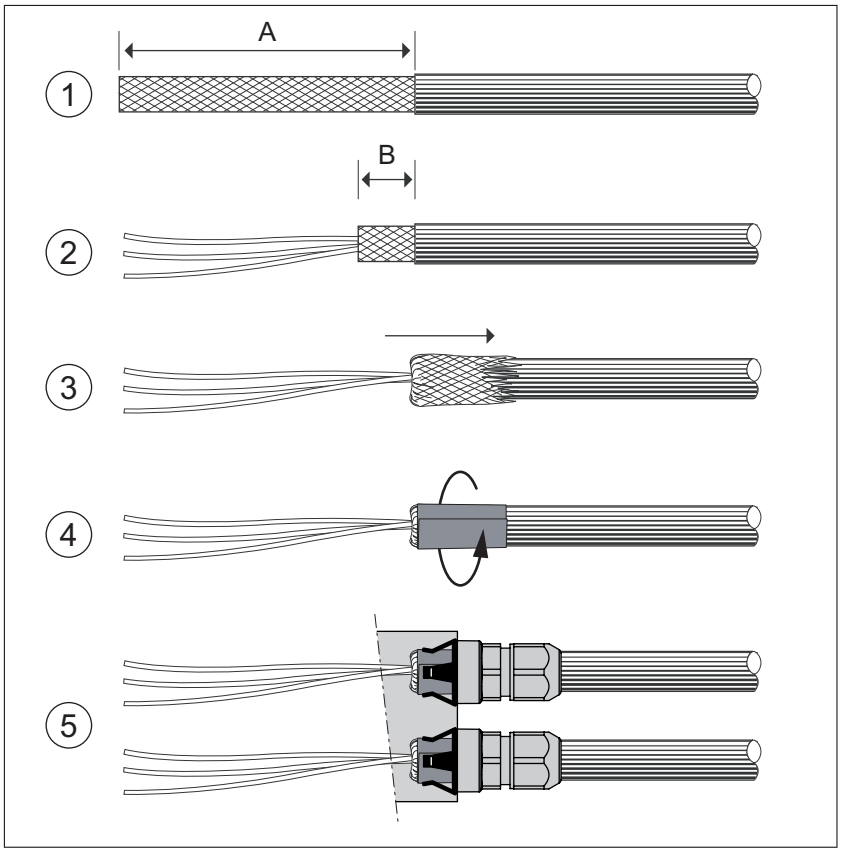

Figure 28: Assembling cables

Length A	mm	95
Length B	mm	10

- (1) Strip the cable jacket of the cables for X1 (IN) and X2 (OUT), length A.
- (2) Shorten the shield to length B.
- (3) Slide the shield braiding back over the cable jacket.
- (4) Fasten the shield with shield foil.
  Recommended size: 50 mm long, 10 mm wide.
- (5) Push the compression nut of the cable gland over the cable.

  Push the cable through the cable gland and tighten the compression nut. Verify that the shield is connected to the shield clip.

0198441113956, V1.00, 07.2013

6.3.4.7 Connecting the signals

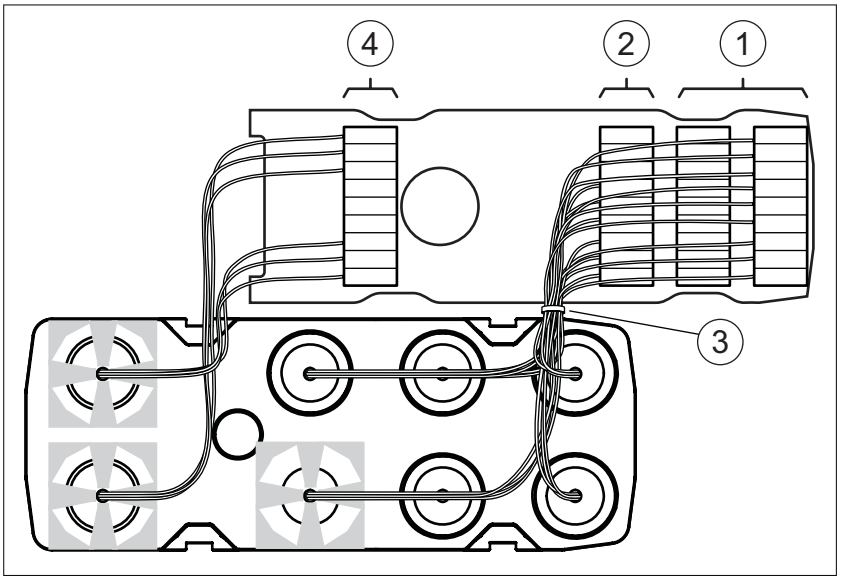

Figure 29: Connecting the signals

- Strip the individual wires.

  Recommendation: Use wire ferrules.
- (1) Connect the signal wires for the digital inputs and outputs to the terminals.
- (2) If you want to use the safety function STO, connect the signal wires for the safety function STO to the terminals.
- (3) Fasten the signal wires for the digital inputs and outputs and the signal wires for the safety function STO with cable ties.
- (4) Connect the signal wires for the fieldbus to the terminals.

  Recommendation: Twist the wires for the corresponding fieldbus connections by 1 to 2 turns. Twisting improves the signal quality and facilitates inserting the cables into the chambers as well as closing the cover.

0198441113956, V1.00, 07.2013

6.3.4.8 Closing the I/O module

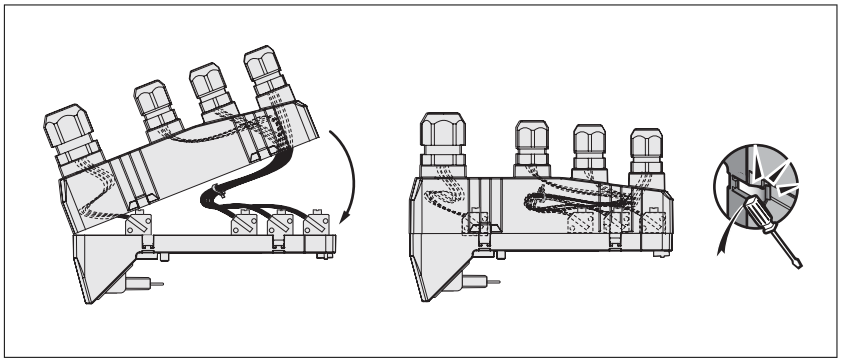

Figure 30: Closing the I/O module

- Place the cables into the cover of the I/O module.
- Close the cover of the I/O module, starting at the fieldbus connection end.

  Verify that no cables are between the clamps in the area of the fieldbus connection.
- Close the 4 clamps of the module.

  Recommendation: Use the handle of a screwdriver.

0198441113956, V1.00, 07.2013

6.3.5 Mounting the I/O connection module

The I/O module can be mounted in slot 3A or in slot 3B.

If the standard braking resistor is used, the choice of slot is limited, see chapter "5.13 Mounting types of the modules".

Do not touch the contacts of the I/O connection module.

- Check the seals for damage. You must not use devices with damaged seals.
- Remove the transport lock from slot 3A or slot 3B. Align the contacts as shown in the illustration below. Only touch the plastic, not the contacts themselves.
- Plug the I/O module into slot 3A or slot 3B. If you use slot 3B, you must first plug in the bottom catch of the module. In a second step, move the contacts towards the device and guide them into the device using your index finger.
- Plug the I/O module into slot 3A or slot 3B and fasten it by tightening the fastening screw.

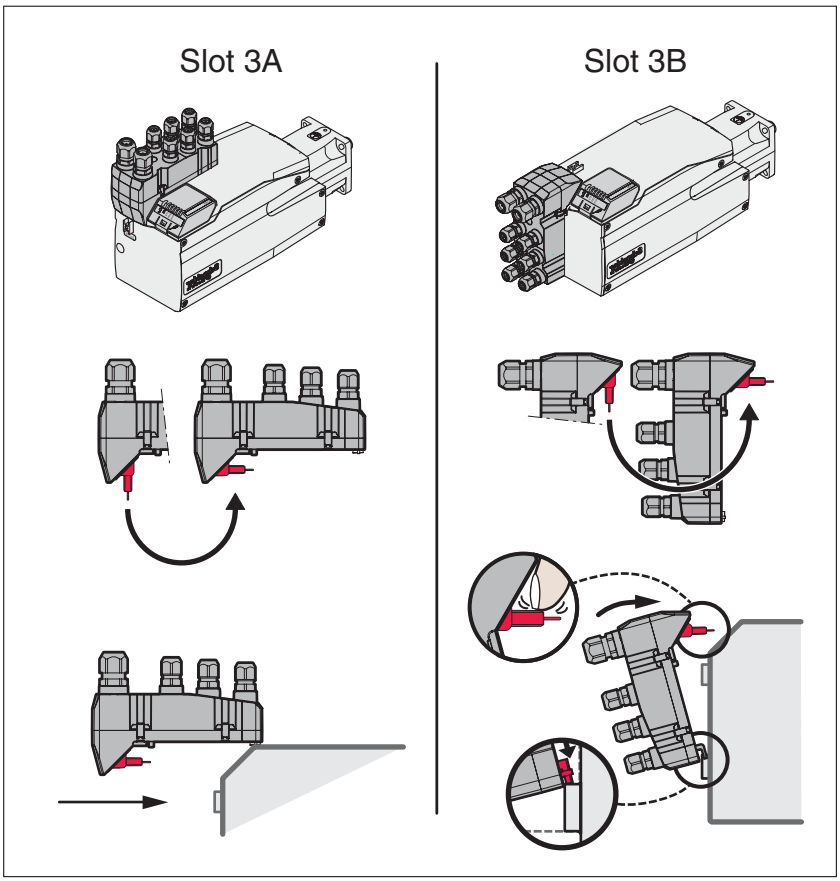

Figure 31: Mounting the I/O module

Note the specified tightening torque see chapter "3.9 Tightening torque and screws".

0198441113956, V1.00, 07.2013

6.3.6 Braking resistor

6.3.6.1 Standard braking resistor

The standard braking resistor is factory-mounted in slot 2; it can be used in slot 2 or in slot 1.

If the standard braking resistor is used, there are several mounting types, see chapter "5.13 Mounting types of the modules".

Note the information in chapter "5.8 Rating the braking resistor", page 63.

Mounting in slot 2 The standard braking resistor is factory-mounted in slot 2. No further steps are required.

Mounting in slot 1 The standard braking resistor can also be mounted in slot 1.

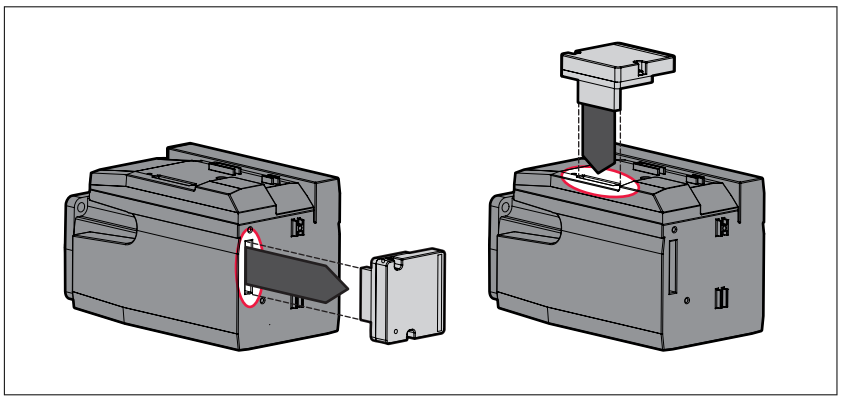

- Loosen the 2 fastening screws and remove the standard braking resistor from slot 2.
- Remove the cover film, plug the standard braking resistor into slot 1 and fasten it by tightening the two fastening screws.

0198441113956, V1.00, 07.2013

6.3.6.2 Connection module for external braking resistor (accessories)

External braking resistors are available as accessories; they are connected via a separate connection module.

Selection and rating of the external braking resistor are described in chapter "5.8 Rating the braking resistor", page 63. For suitable braking resistors, see chapter "12 Accessories and spare parts", page 468.

Cable specifications

Shield:	Required, both ends grounded
Twisted Pair:	-
PELV:	-
Cable composition:	Minimum conductor cross section: Same cross section as power stage supply, see page 112. The conductors must have a sufficiently large cross section so that the fuse at the mains connection can trip if required.
Minimum cable diameter:	6 mm
Maximum cable diameter	10.5 mm
Maximum cable length:	3 m
Special features:	Temperature resistance

See chapter "5.2 Cables" for basic information on the cables.

The braking resistors recommended in chapter "12 Accessories and spare parts" have a 3-wire, temperature-resistant cable with a length of 0.75 m to 3 m.

Properties of the connection terminals

Connection cross section	[mm²]	0.75 ... 4 (AWG 18 ... AWG 12)
Stripping length	[mm]	8 ... 9

The spring terminals are approved for fine wire conductors and rigid conductors. Observe the maximum permissible connection cross section. Take into account the fact that wire ferrules increase the conductor cross section.

Wire ferrules: If you use wire ferrules, use only wire ferrules with collars for these terminals.

Opening the connection module

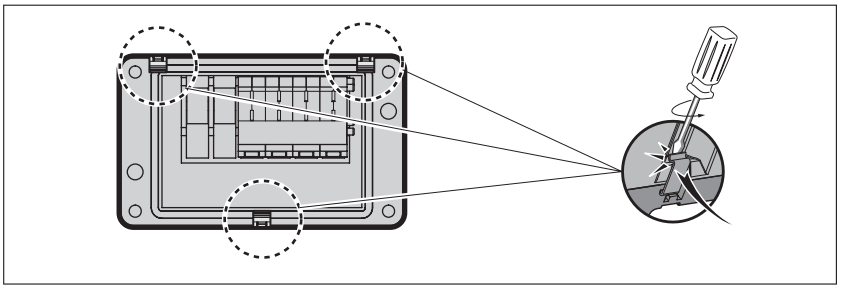

Figure 32: Opening the connection module

0198441113956, V1.00, 07.2013

Wiring diagram

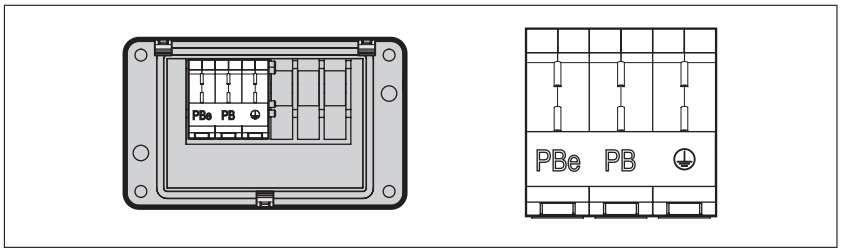

Figure 33: Connection module for external braking resistor

Usage of the connection terminals

Use the connection terminals as shown in the illustration below:

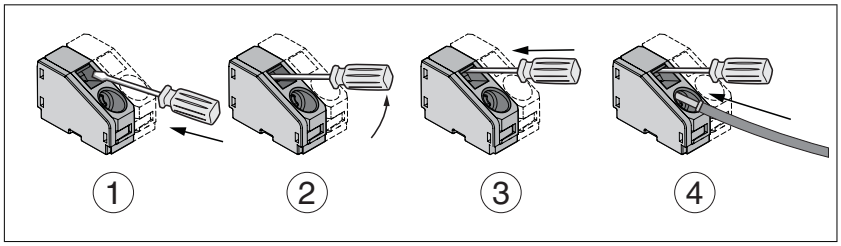

Figure 34: Usage of the connection terminals

Connecting the external braking resistor

⚠ WARNING

HOT SURFACES

The braking resistor may heat up to over 250°C (480°F) during operation.

- Avoid contact with the hot braking resistor.
- Do not allow flammable or heat-sensitive parts in the immediate vicinity of the braking resistor.
- Provide for good heat dissipation.
- Check the temperature of the braking resistor under the most critical condition by performing a test run.

Failure to follow these instructions can result in death, serious injury or equipment damage.

- ▸ Switch off all supply voltages. Observe the safety instructions concerning electrical installation.
- ▸ Verify that no voltages are present (safety instructions).
- ▸ Open the cover.
- ▸ Open the cable gland.
- ▸ Push the cable through the cable gland.
- ▸ Connect the PE connection (ground).
- ▸ Connect the connections PBe and PB.
- ▸ Connect the cable shield to the shield clamp in the connector (large surface area contact).
- ▸ Close the cable gland.
- ▸ Close the cover.

Note the specified tightening torque see chapter "3.9 Tightening torque and screws".

Parameter `RESint_ext` is used to switch over to the external braking resistor. The parameter settings for the braking resistor can be found in chapter "7.5.9 Setting the braking resistor parameters", page155. Verify that the selected external braking resistor is really connected.

0198441113956, V1.00, 07.2013

Test the function of the braking resistor under realistic conditions during commissioning, see chapter
"7.5.9 Setting the braking resistor parameters", page 155.

Mounting the connection module

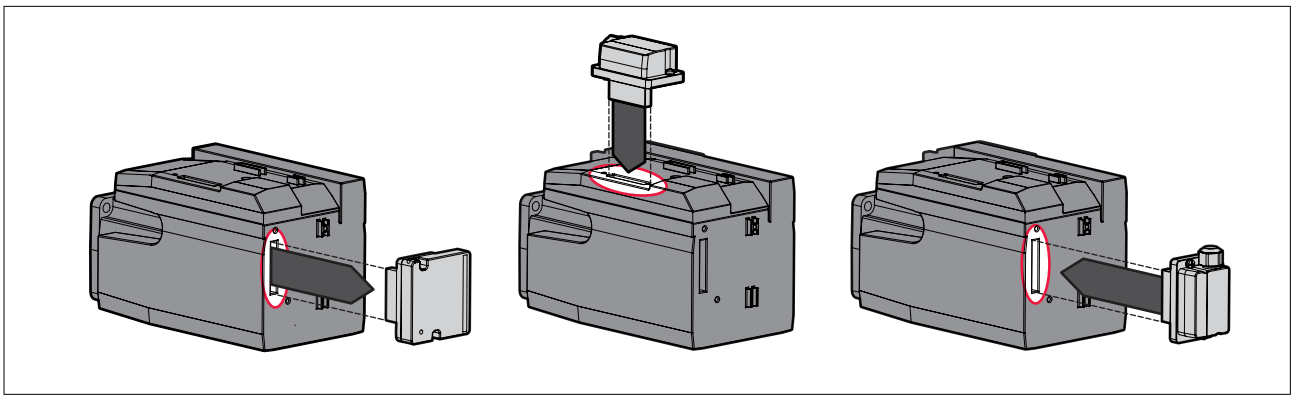

- Loosen the 2 fastening screws and remove the standard braking resistor from slot 2.
- Remove the cover film, plug the connection module for the external braking resistor into slot 1 or into slot 2 and fasten it by tightening the two fastening screws. Note the information concerning the different mounting types in chapter
  "5.13 Mounting types of the modules".

Note the specified tightening torque see chapter
"3.9 Tightening torque and screws".

0198441113956, V1.00, 07.2013

6.3.7 Mains supply

⚠ ⚠ DANGER

ELECTRIC SHOCK CAUSED BY INSUFFICIENT GROUNDING

This product has an increased leakage current >3.5 mA.

- Use a protective ground conductor at with least 10 mm^2 (AWG 6) or two protective ground conductors with the cross section of the conductors supplying the power terminals. Verify compliance with all local and national electrical code requirements as well as all other applicable regulations with respect to grounding of all equipment.

Failure to follow these instructions will result in death or serious injury.

⚠ WARNING

INSUFFICIENT PROTECTION AGAINST OVERCURRENTS

- Use the external fuses specified in "Technical data".
- Do not connect the product to a supply mains whose short-circuit current rating (SCCR) exceeds the permissible value specified in the chapter "Technical Data".

Failure to follow these instructions can result in death, serious injury or equipment damage.

⚠ WARNING

THIS PRODUCT MAY CAUSE DIRECT CURRENT IN THE PROTECTIVE GROUND CONDUCTOR

If a residual current device (RCD) is used, conditions must be observed.

Failure to follow these instructions can result in death or serious injury.

See chapter "5.3 Residual current device" for information and conditions concerning the use of a residual current device.

NOTICE

DESTRUCTION DUE TO INCORRECT MAINS VOLTAGE

- Before switching on and configuring the product, verify that it is approved for the mains voltage.

Failure to follow these instructions can result in equipment damage.

0198441113956, V1.00, 07.2013

6.3.7.1 Connection module for mains supply

The products are intended for industrial use and may only be operated with a permanently installed connection.

Prior to connecting the device, check the approved mains types, see chapter "3.3 General features", page 28.

Cable specifications

Observe the required cable properties, see page 56, and the information on electromagnetic compatibility (EMC), see page 54.

Shield:	-
Twisted Pair:	-
PELV:	-
Cable composition:	The conductors must have a sufficiently large cross section so that the fuse at the mains connection can trip if required.
Minimum cable diameter:	8 mm
Maximum cable diameter	15 mm
Maximum cable length:	-
Special features:	-

Properties of the connection terminals

Connection cross section	[mm²]	0.75 ... 4 (AWG 18 ... AWG 12)
Stripping length	[mm]	8 ... 9

The terminals are approved for wires and rigid conductors. Observe the maximum permissible connection cross section. Take into account the fact that wire ferrules increase the connection cross section.

Prerequisites for connecting the power stage supply

Note the following information:

- Three-phase devices may only be connected and operated via three phases.
- Use upstream mains fuses. See chapter "3.6.1 Motor-specific data", page 33 for information on fuse types and fuse ratings.
- Observe the EMC requirements. If necessary, use surge arresters, mains filters and mains reactors.
- If you use an external mains filter, the mains cable must be shielded and grounded at both ends if the length between the external mains filter and the device exceeds 200 mm.
- See page 24 for a UL-compliant design.
- Due to high leakage currents, use a protective ground conductor at with least 10 mm² (AWG 6) or two protective ground conductors with the cross section of the conductors supplying the power terminals. Verify compliance with all local and national electrical code requirements as well as all other applicable regulations with respect to grounding of all equipment.

0198441113956, V1.00, 07.2013

Opening the connection module

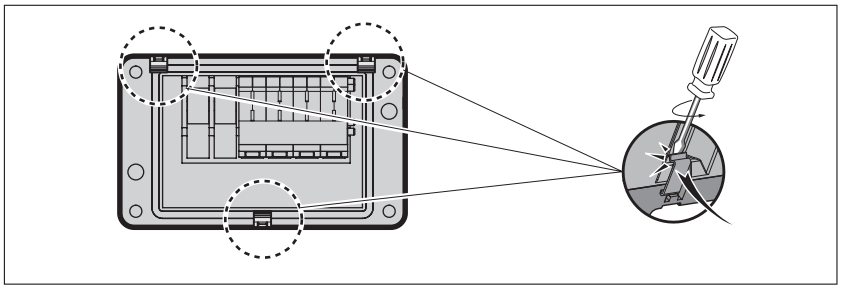

Figure 35: Opening the connection module

Wiring diagram

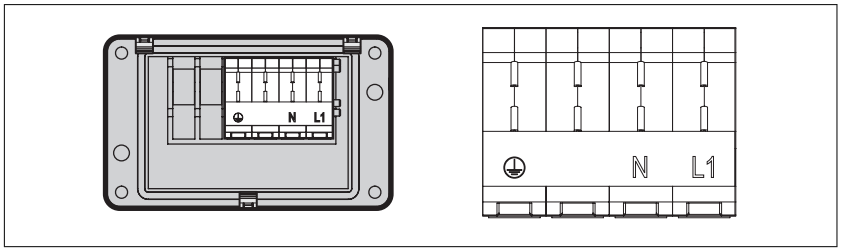

Figure 36: Wiring diagram for single-phase device.

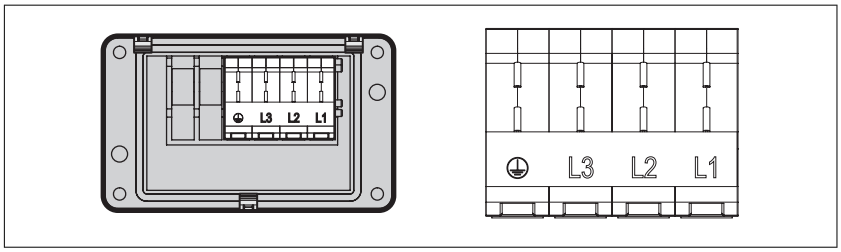

Figure 37: Wiring diagram for three-phase device

Usage of the connection terminals

Use the connection terminals as shown in the illustration below:

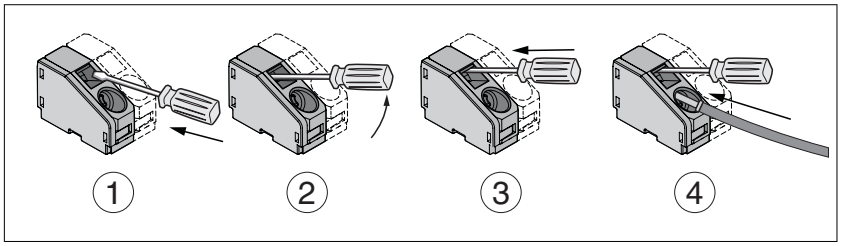

Figure 38: Usage of the connection terminals

Connecting mains supply

- Switch off all supply voltages. Observe the safety instructions concerning electrical installation.
- Verify that no voltages are present (safety instructions).
- Verify the type of mains. See chapter "3.3 General features", page 28 for the approved types of mains.
- Open the cover.
- Open the cable gland.
- Push the cable through the cable gland.
- Connect the PE connection (ground).
- Connect the connections L1 and N of single-phase devices.
- Connect the connections L1, L2 and L3 of three-phase devices.
- Close the cable gland.
- Close the cover.

0198441113956, V1.00, 07.2013

Mounting the connection module

The module for the supply voltage can be mounted in slot 1 or in slot 2.

The selection of the slot depends on the slot in which the standard braking resistor or the connection module for the external braking resistor has been mounted.

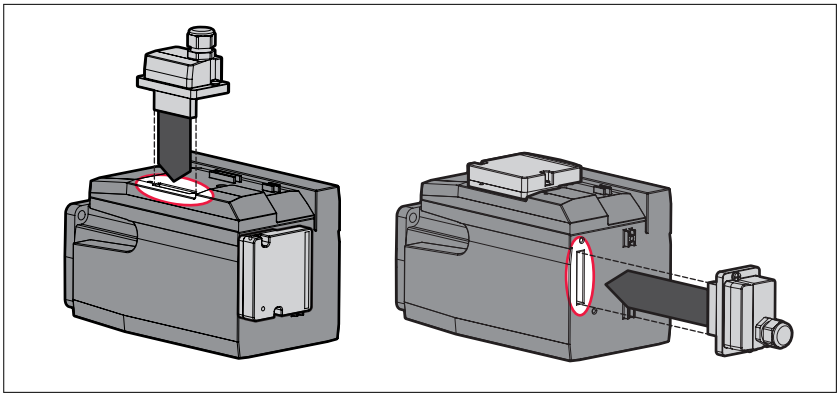

- Remove the cover film, plug the module for the supply voltage into slot 1 or into slot 2 and fasten it by tightening the two fastening screws.

Note the specified tightening torque see chapter "3.9 Tightening torque and screws".

0198441113956, V1.00, 07.2013

6.3.8 Commissioning interface

See page 122 for information on how to open the cover of the commissioning interface

Cable specifications

Shield:	Required, both ends grounded
Twisted Pair:	Required
PELV:	Required
Cable composition:	8*0.25 mm², (8*AWG 22)
Maximum cable length:	100 m
Special features:	-

See chapter "5.2 Cables" for basic information on the cables.

Connecting a PC

A PC with commissioning software can be connected for commissioning. The PC is connected via a bidirectional USB/RS485 converter, see chapter Accessories, page 467.

Wiring diagram

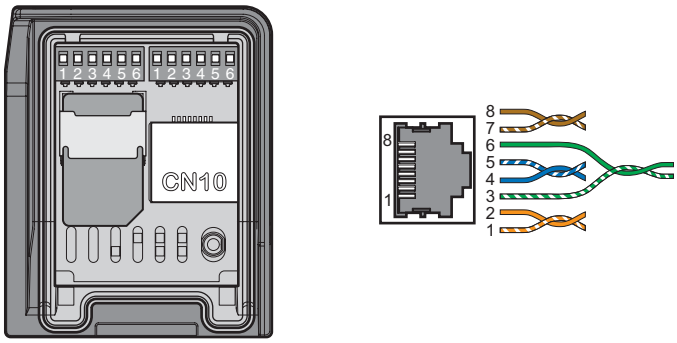

Figure 39: Wiring diagram PC with commissioning software

Pin	Signal	Meaning	I/O
1 ... 3	–	Reserved	-
4	MOD_D1	Transmit/receive signal	RS485
5	MOD_D0	Transmit/receive signal, inverted	RS485
6 ... 8	–	Reserved	-

The cover of the commissioning must be closed after commissioning.

0198441113956, V1.00, 07.2013

6.4 Checking installation

Verify proper installation:

- ▶ Check the mechanical installation of the entire drive system:
- Does the installation meet the specified distance requirements?
- Did you tighten all fastening screws with the specified tightening torque?
- ▶ Check the electrical connections and the cabling:
- Did you connect all protective ground conductors?
- Do all fuses have the correct rating; are the fuses of the specified type?
- Did you connect or insulate all wires at the cable ends?
- Did you properly connect and install all cables and connectors?
- Are the mechanical locks of the connectors correct and effective?
- Did you properly connect the signal wires?
- Are the required shield connections EMC-compliant?
- Did you take all measures for EMC compliance?

- ▶ Verify that all covers and seals have been properly installed to achieve the required degree of protection.

- ■ If the safety function STO and spring terminals are used:
- ▶ Verify conductive connection between cable shield of STO (IN) and ground.

0198441113956, V1.00, 07.2013

7 Commissioning

7

This chapter describes how to commission the product.

7.1 Basic information

An alphabetically sorted overview of the parameters can be found in the chapter "Parameters". The use and the function of some parameters are explained in more detail in this chapter.

DANGER

ELECTRIC SHOCK CAUSED BY INCORRECT USE

The safety function STO (Safe Torque Off) does not cause electric isolation. The DC bus voltage is still present.

- Turn off the mains voltage using an appropriate switch to achieve a voltage-free condition.

Failure to follow these instructions will result in death or serious injury.

WARNING

UNINTENDED BEHAVIOR

Unsuitable settings or unsuitable data may trigger unexpected movements, trigger signals, damage parts and disable monitoring functions.

- Do not operate the drive system with unknown settings or data.
- Verify that the stored data and settings are correct.
- When commissioning, carefully run tests for all operating states and potential error situations.
- Verify the functions after replacing the product and also after making changes to the settings or data.
- Only start the system if there are no persons or obstructions in the hazardous area.

Failure to follow these instructions can result in death, serious injury or equipment damage.

0198441113956, V1.00, 07.2013

⚠ WARNING

FALLING PARTS

The motor may move, tip and crash down as a result of the reaction torque.

- Mount the motor securely so it will not break loose during strong acceleration.

Failure to follow these instructions can result in death, serious injury or equipment damage.

⚠ WARNING

MOVEMENT WITHOUT BRAKING EFFECT

If power outage, functions or errors cause the power stage to be switched off, the motor is no longer decelerated in a controlled way.

- Secure the hazardous area so it cannot be accessed.
- If necessary, use a cushioned mechanical stop or a suitable brake.

Failure to follow these instructions can result in death, serious injury or equipment damage.

⚠ WARNING

LOSS OF BRAKING FORCE DUE TO WEAR OR HIGH TEMPERATURE

Applying the holding brake while the motor is running will cause excessive wear and loss of the braking force.

- Do not use the brake as a service brake.
- Note that a emergency stop may also cause wear.
- Note the maximum number of brake applications and the kinetic energy during braking of moving loads.

Failure to follow these instructions can result in death, serious injury or equipment damage.

⚠ WARNING

UNEXPECTED MOVEMENT

Releasing the holding brake may cause an unexpected movement in the system, for example if vertical axes are used.

- Take appropriate measures to avoid damage caused by falling or lowering loads.
- Only run the test if there are no persons or obstacles in the hazardous area.

Failure to follow these instructions can result in death, serious injury or equipment damage.

0198441113956, V1.00, 07.2013

⚠ WARNING

UNEXPECTED MOVEMENT

When the product is operated for the first time, there is a risk of unexpected movements caused by possible wiring errors or unsuitable parameters.

- Run initial tests without coupled loads.
- Verify that a functioning button for emergency stop is within reach.
- Anticipate movements in the incorrect direction or oscillation of the motor.
- Only start the system if there are no persons or obstructions in the hazardous area.

Failure to follow these instructions can result in death, serious injury or equipment damage.

⚠ WARNING

HOT SURFACES

The heat sink at the product may heat up to over 100°C (212°F) during operation.

- Avoid contact with the hot heat sink.
- Do not allow flammable or heat-sensitive parts in the immediate vicinity.
- Consider the measures for heat dissipation described.

Failure to follow these instructions can result in death or serious injury.

⚠ WARNING

UNINTENDED BEHAVIOR CAUSED BY ACCESS CONTROL

Improper use of access control may cause commands to be triggered or blocked.

- Verify that no unintended behavior is caused as a result of enabling or disabling exclusive access.
- Verify that impermissible access is blocked.
- Verify that required access is available.

Failure to follow these instructions can result in death, serious injury or equipment damage.

0198441113956, V1.00, 07.2013

7.2 Overview

Required components

The following is required for commissioning:

- Commissioning software
  http://www.schneider-electric.com
- ESI file (EtherCAT Slave Information, file format XML)
  http://www.schneider-electric.com
- Fieldbus converter for the commissioning software for connection via the commissioning interface

You must also re-commission an already configured product if you want to use it under changed operating conditions.

To be done

▸ Carry out the steps below in the specified order.

Subject	Page
"6.4 Checking installation"	116
"7.4 Add the product as an NC axis in "TwinCAT"."	123

▸ Carry out the following steps using the commissioning software.

Subject	Page
"7.5 Commissioning procedure"	140
"7.5.1 Operating state (state diagram)"	140
"7.5.2 Setting limit values"	141
"7.5.3 Digital inputs / outputs"	144
"7.5.4 Testing the signals of the limit switches"	145
"7.5.5 Testing the safety function STO"	146
"7.5.6 Holding brake (option)"	147
"7.5.7 Checking the direction of movement"	149
"7.5.8 Setting parameters for encoder"	151
"7.5.9 Setting the braking resistor parameters"	155
"7.5.10 Autotuning the device"	157
"7.5.11 Enhanced settings for autotuning"	161

0198441113956, V1.00, 07.2013

Interfaces

The following interfaces can be used for commissioning, parameterization and diagnostics:

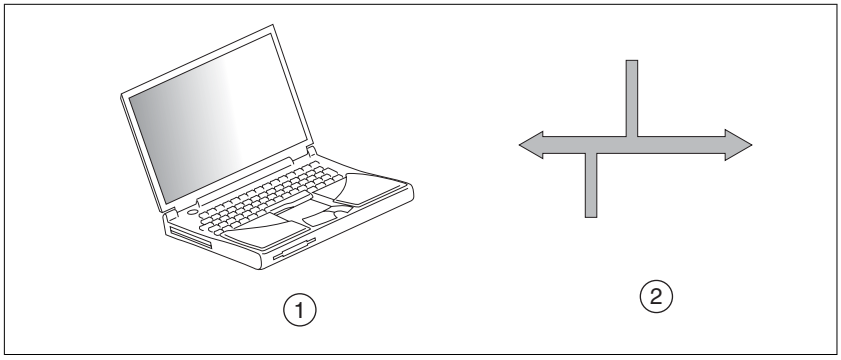

Figure 40: Commissioning tools

(1) PC with commissioning software
(2) Fieldbus

Device settings can be duplicated. Stored device settings can be transferred to a device of the same type. Duplicating the device settings can be used if multiple devices are to have the same settings, for example, when devices are replaced.

Source of commissioning software

The latest version of the commissioning software is available for download from the internet.

http://www.schneider-electric.com

Commissioning software

- Tuning of the controller parameters via a graphical user interface
- Comprehensive set of diagnostics tools for optimization and maintenance
- Long-term trace for evaluation of the performance
- Testing the input and output signals
- Tracking signals on the screen
- Archiving of device settings and recordings with export function for further processing in other applications

The commissioning software has a graphic user interface and is used for commissioning, diagnostics and testing settings.

0198441113956, V1.00, 07.2013

Opening the cover of the commissioning interface

The following components can be found below the cover of the commissioning interface:

- DIP switch for "Identification"
- Card holder for the memory card
- Commissioning interface CN10

The cover of the commissioning interface can be opened by means of a flat blade screwdriver

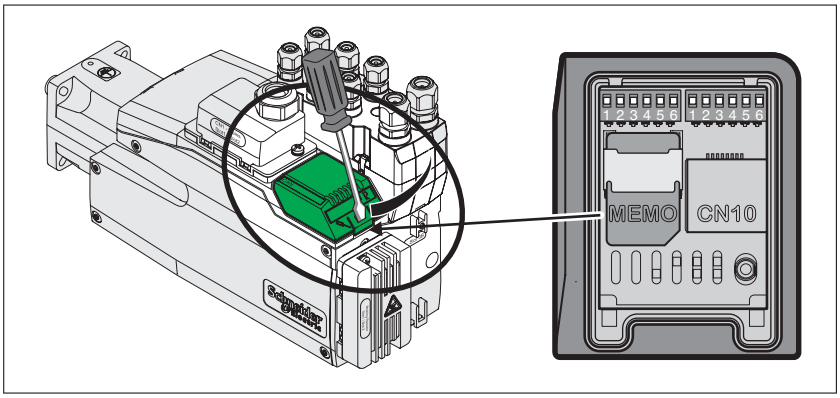

The CN10 interface does not support devices without their own power supply.

Use standard RJ45 patch cables. See chapter "12.1 Commissioning tools", page 467 for cables and converters.

The cover of the commissioning must be closed after commissioning.

Connecting a PC

A PC with commissioning software can be connected for commissioning. The PC is connected via a bidirectional USB/RS485 converter, see chapter Accessories, page 467.

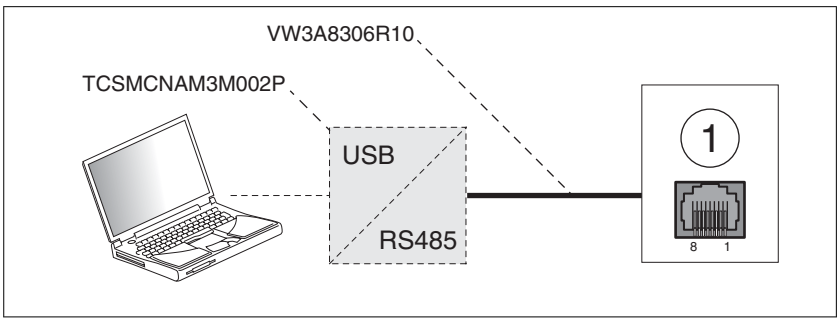

Figure 41: Connecting a PC to CN10 (1)

7.3 ESI file (EtherCAT Slave Information)

ESI file

An ESI file (EtherCAT Slave Information, XML file format) is available for the product.

The ESI file can be downloaded at:

http://www.schneider-electric.com

The ESI file must be integrated into the system of the master controller.

0198441113956, V1.00, 07.2013

7.4 Add the product as an NC axis in "TwinCAT".

The product is added to the fieldbus using the BeckhoffTwinCAT software.

TwinCAT support

The following TwinCAT functions are supported:

- TwinCAT-Systeme PLC, NC PTP, NC I and CNC
- TwinCAT libraries using TcMc.lib or TcMc2.lib
- TwinCAT homing methods Plc CAM and Software Sync

7.4.1 Adding the product to TwinCAT

Scan the EtherCAT network to automatically add the product the TwinCAT.

■ The ESI file must have been added to TwinCAT.

▸ Scan the network.

▸ Add the product to the NC configuration.

◁ The found product is added to the NC configuration.

0198441113956, V1.00, 07.2013

7.4.2 Setting the process data

4 predefined RxPDOs and 4 predefined TxPDOs are available.

Depending on the selected operating mode, one of the predefined RxPDOs and one of the predefined TxPDOs can be used:

Operating mode	Suitable PDO
Cyclic Synchronous Position	"7.4.2.1 First predefined PDO"
Cyclic Synchronous Velocity	"7.4.2.2 Second predefined PDO"
Cyclic Synchronous Torque	"7.4.2.3 Third predefined PDO"
Any type of switch between : Cyclic Synchronous Position Cyclic Synchronous Velocity Cyclic Synchronous Torque	"7.4.2.4 Fourth predefined PDO"

Only a single predefined RxPDO and only a single predefined TxPDO can be used simultaneously.

The PDOs can be adapted as required. A maximum of 10 parameters are possible per RxPDO and TxPDO.

7.4.2.1 First predefined PDO

The first PDO is suitable for the operating mode Cyclic Synchronous Position.

Structure RxPDO 1600_h

Index	Parameter name (DS402 name)
$6040:0_h$	`DCOMcontrol` (Control word)
$607A:0_h$	`PPp_target` (Target position)
$3008:11_h$	`IO_DQ_set`

Structure TxPDO $1A00_h$

Index	Parameter name (DS402 name)
$6041:0_h$	`_DCOMstatus` (Status word)
$6064:0_h$	`_p_act` (Position actual value)
$603F:0_h$	`_LastError` (Error code)
$3008:1_h$	`_IO_act`

0198441113956, V1.00, 07.2013

7.4.2.2 Second predefined PDO

The second PDO is suitable for the operating mode Cyclic Synchronous Velocity.

Structure RxPDO 1601h

Index	Parameter name (DS402 name)
6040:0h	DCOMcontrol (Control word)
60FF:0h	PVv_target (Target velocity)
3008:11h	IO_DQ_set

Structure TxPDO 1A01h

Index	Parameter name (DS402 name)
6041:0h	_DCOMstatus (Status word)
6064:0h	_p_act (Position actual value)
603F:0h	_LastError (Error code)
3008:1h	_IO_act

7.4.2.3 Third predefined PDO

The third PDO is suitable for the operating mode Cyclic Synchronous Torque.

Structure RxPDO 1602h

Index	Parameter name (DS402 name)
6040:0h	DCOMcontrol (Control word)
6071:0h	PTtq_target (Target torque)
3008:11h	IO_DQ_set

Structure TxPDO 1A02h

Index	Parameter name (DS402 name)
6041:0h	_DCOMstatus (Status word)
6064:0h	_p_act (Position actual value)
6077:0h	_tq_act (Torque actual value)
603F:0h	_LastError (Error code)
3008:1h	_IO_act

0198441113956, V1.00, 07.2013

7.4.2.4 Fourth predefined PDO

The fourth predefined PDO is suitable for the operating modes Cyclic Synchronous Position, Cyclic Synchronous Velocity and Cyclic Synchronous Torque. You can switch between the operating modes as required.

Structure RxPDO 1603_h

Index	Parameter name (DS402 name)
$6040:0_h$	`DCOMcontrol` (Control word)
$6060:0_h$	`DCOMopmode` (Mode of operation)
$607A:0_h$	`PPp_target` (Target position)
$60FF:0_h$	`PVv_target` (Target velocity)
$6071:0_h$	`PTtq_target` (Target torque)
$3008:11_h$	`IO_DQ_set`

Structure TxPDO $1A03_h$

Index	Parameter name (DS402 name)
$6041:0_h$	`_DCOMstatus` (Status word)
$6061:0_h$	`_DCOMopmd_act` (Mode of operation display)
$6064:0_h$	`_p_act` (Position actual value)
$60F4:0_h$	`_p_dif` (Following error actual value)
$6077:0_h$	`_tq_act` (Torque actual value)
$603F:0_h$	`_LastError` (Error code)
$3008:1_h$	`_IO_act`

0198441113956, V1.00, 07.2013

7.4.3 Setting monitoring of the position deviation

Operating mode Cyclic Synchronous Position

Monitoring of the position deviation must be deactivated for the operating mode Cyclic Synchronous Position since the position deviation is monitored in the product.

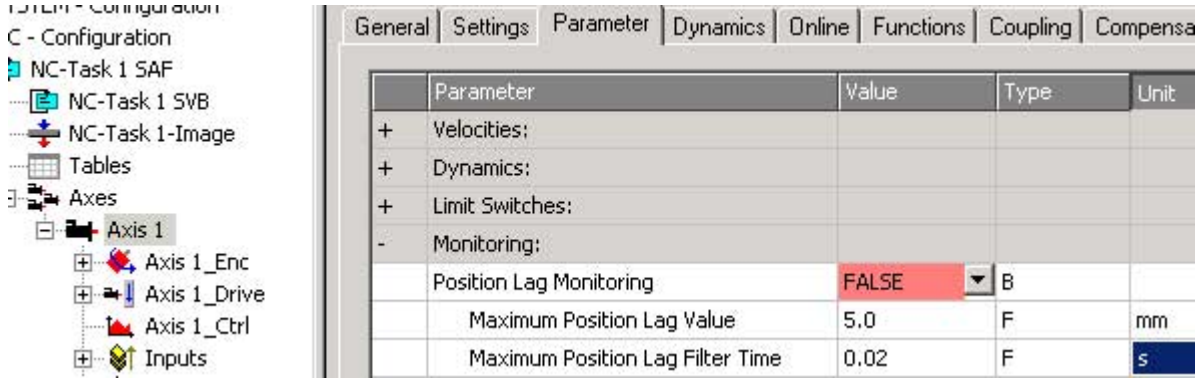

- If you use the operating mode Cyclic Synchronous Position, set "Position Lag Monitoring" to "FALSE".

Operating mode Cyclic Synchronous Velocity

Monitoring of the position deviation must be activated for the operating mode Cyclic Synchronous Velocity.

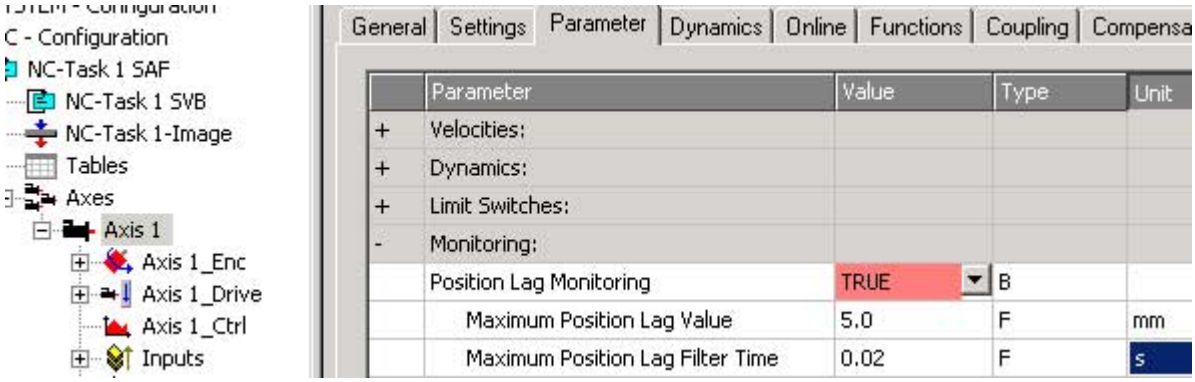

- If you use the operating mode Cyclic Synchronous Velocity, set "Position Lag Monitoring" to "TRUE".

Operating mode Cyclic Synchronous Torque

Monitoring of the position deviation depends on the application for the operating mode Cyclic Synchronous Torque.

0198441113956, V1.00, 07.2013

7.4.4 Setting the scaling factor

The scaling factor must be set.

Formula:
Scaling factor = 1 / (position scaling in the product / mechanical system)

Example:

Mechanical system:
1 revolution corresponds to 10 mm

Position scaling in the product:
1 revolution corresponds to 131072 INC

Calculation:
1 / (131072 INC / 10 mm) = 0.000076293945313 mm/INC

NOTE: Position scaling in the product is adapted by the list of startup parameters; it must not be changed, see chapter "7.4.8 List of the startup parameters".

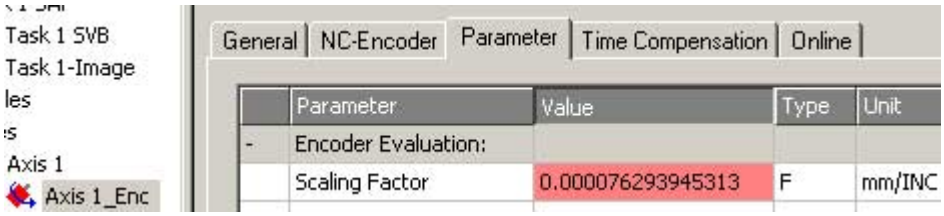

- Set "Scaling Factor" to 0.000076293945313 (example).

7.4.5 Setting homing

For the TwinCAT homing method Software Sync, you must adjust the setting "Encoder Sub Mask (absolute range maximum value)".

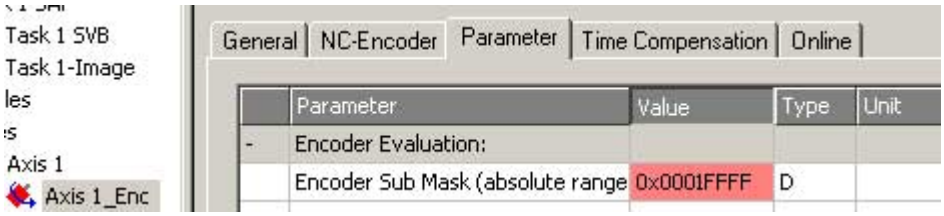

- Set "Encoder Sub Mask (absolute range maximum value)" to 0x0001FFFF.

0198441113956, V1.00, 07.2013

7.4.6 Setting the output scaling

The output scaling must be set for the operating mode Cyclic Synchronous Velocity.

Formula:
Output scaling = (`ScaleVELdenom` / `ScaleVELnum`) * 0.007153

Example:

Velocity scaling in the product
`ScaleVELdenom` = 100
`ScaleVELnum` = 1

Calculation:
(100 / 1) * 0.007153 = 0.7153

NOTE: The velocity scaling in the product must be adapted via additional parameters in the list of the startup parameters, see chapter "7.4.8 List of the startup parameters".

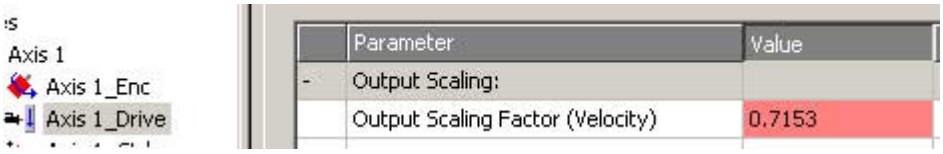

- Set "Output Scaling Factor (Velocity)" to 0.7153 (example).

7.4.7 Setting the velocity gain Kv of the position controller

The velocity gain kV or the position controller must be adapted for the operating mode Cyclic Synchronous Velocity.

- Set the velocity gain (Kv factor) of the position controller as described in the TwinCAT manual under "TwinCAT Axis Commissioning".

0198441113956, V1.00, 07.2013

7.4.8 List of the startup parameters

The list of the startup parameters comprises parameters of the product. These parameters are adjusted so that the product can be added to "TwinCAT" as an NC axis.

The following parameters are contained in the list of start-up parameters:

- `CompParSyncMot`
- `MOD_Enable`
- `LIM_QStopReact`
- `IOsigRespOfPS`
- `ScalePOSdenom`
- `ScalePOSnum`
- `CTRL1_KFPp`
- `CTRL2_KFPp`
- `DCOMopmode`
- `ECATinpshifttime`

The following parameters must be added to the list of startup parameters for the operating mode Cyclic Synchronous Velocity:

- `ScaleVELdenom`
- `ScaleVELnum`
- `RAMP_v_max`
- `CTRL_v_max`
- `MON_v_zeroclamp`

Setting the compatibility for Synchronous operating modes

The parameter for the compatibility setting for the Synchronous operating modes is set to the following value:

Parameter name	Value that is written
`CompParSyncMot`	1 The value must not be changed.

Setting the modulo range

The parameter for the modulo range is set to the following value:

Parameter name	Value that is written
`MOD_Enable`	0 The value must not be changed.

0198441113956, V1.00, 07.2013

Parameter name	Description	Unit Minimum value Factory setting Maximum value	Data type R/W Persistent Expert	Parameter address via fieldbus
MOD_Enable	Activation of Modulo **0 / Modulo Off**: Modulo is off **1 / Modulo On**: Modulo is on Activating Modulo does not automatically change the value of other parameters. Before changing this value, verify that the parameter settings for the intended application are correct. NOTE: Modulo must be deactivated for Autotuning. Setting can only be changed if power stage is disabled. Changed settings become active immediately.	- 0 0 1	UINT16 UINT16 R/W per. -	CANopen 3006:38_h Modbus 1648

Setting the response to "Quick Stop"

The parameter for the response to a "Quick Stop" is set to the following value:

Parameter name	Value that is written
LIM_QStopReact	-1

Parameter name	Description	Unit Minimum value Factory setting Maximum value	Data type R/W Persistent Expert	Parameter address via fieldbus
LIM_QStopReact	Quick Stop option code **-2 / Torque ramp (Fault)**: Use torque ramp and transit to operating state 9 Fault **-1 / Deceleration Ramp (Fault)**: Use deceleration ramp and transit to operating state 9 Fault **6 / Deceleration ramp (Quick Stop)**: Use deceleration ramp and remain in operating state 7 Quick Stop **7 / Torque ramp (Quick Stop)**: Use torque ramp and remain in operating state 7 Quick Stop Type of deceleration for Quick Stop. Setting of deceleration ramp with parameter RAMPquickstop. Setting of torque ramp with parameter LIM_I_maxQSTP. If a deceleration ramp is already active, the parameter cannot be written. Changed settings become active immediately.	- -2 6 7	INT16 INT16 R/W per. -	CANopen 3006:18_h Modbus 1584

Setting the response if a limit switch error is detected

The parameter for the response to be triggered if a limit switch error is detected is set to the following value:

0198441113956, V1.00, 07.2013

Parameter name	Value that is written
IOsigRespOfPS	1 The value must not be changed.

Parameter name	Description	Unit Minimum value Factory setting Maximum value	Data type R/W Persistent Expert	Parameter address via fieldbus
IOsigRespOfPS	Response to active limit switch during enabling of power stage **0 / Error**: Active limit switch triggers an error. **1 / No Error**: Active limit switch does not trigger an error. Defines the response when the power stage is enabled while a hardware limit switch is active. Changed settings become active immediately.	- 0 0 1	UINT16 UINT16 R/W per. -	CANopen 3006:6$_h$ Modbus 1548

Setting position scaling

The parameter for position scaling is set to the following value:

Parameter name	Value that is written
ScalePOSdenom	131072 The value must not be changed.
ScalePOSnum	1 The value must not be changed.

These values are required for the operating modes Cyclic Synchronous Position, Cyclic Synchronous Velocity and Cyclic Synchronous Torque; they must not be changed.

0198441113956, V1.00, 07.2013

Parameter name	Description	Unit Minimum value Factory setting Maximum value	Data type R/W Persistent Expert	Parameter address via fieldbus
ScalePOSdenom	Position scaling: Denominator Refer to numerator (ScalePOSnum) for a description. A new scaling is activated when the numerator value is supplied. Setting can only be changed if power stage is disabled.	usr_p 1 16384 2147483647	INT32 INT32 R/W per. -	CANopen 3006:7h Modbus 1550
ScalePOSnum	Position scaling: Numerator Specification of the scaling factor: Motor revolutions ---------- User-defined units [usr_p] A new scaling is activated when the numerator value is supplied. Setting can only be changed if power stage is disabled. Changed settings become active immediately.	revolution 1 1 2147483647	INT32 INT32 R/W per. -	CANopen 3006:8h Modbus 1552

Setting the velocity feed-forward control

The parameter for the velocity feed-forward control is set to the following value:

Parameter name	Value that is written
CTRL1_KFPp	1000
CTRL2_KFPp	1000

Parameter name	Description	Unit Minimum value Factory setting Maximum value	Data type R/W Persistent Expert	Parameter address via fieldbus
CTRL1_KFPp	Velocity feed-forward control In the case of switching between the two controller parameter sets, the values are adapted linearly over the time defined in the parameter CTRL_ParChgTime. In increments of 0.1 %. Changed settings become active immediately.	% 0.0 0.0 200.0	UINT16 UINT16 R/W per. -	CANopen 3012:6h Modbus 4620
CTRL2_KFPp	Velocity feed-forward control In the case of switching between the two controller parameter sets, the values are adapted linearly over the time defined in the parameter CTRL_ParChgTime. In increments of 0.1 %. Changed settings become active immediately.	% 0.0 0.0 200.0	UINT16 UINT16 R/W per. -	CANopen 3013:6h Modbus 4876

Setting the operating mode

The parameter for the operating mode is set to the following value:

0198441113956, V1.00, 07.2013

Parameter name	Value that is written
DCOMopmode	8

Parameter name	Description	Unit Minimum value Factory setting Maximum value	Data type R/W Persistent Expert	Parameter address via fieldbus
DCOMopmode	Operating mode **-6 / Manual Tuning / Autotuning**: Manual Tuning or Autotuning **-1 / Jog**: Jog **0 / Reserved**: Reserved **1 / Profile Position**: Profile Position **3 / Profile Velocity**: Profile Velocity **4 / Profile Torque**: Profile Torque **6 / Homing**: Homing **7 / Interpolated Position**: Interpolated Position **8 / Cyclic Synchronous Position**: Cyclic Synchronous Position **9 / Cyclic Synchronous Velocity**: Cyclic Synchronous Velocity **10 / Cyclic Synchronous Torque**: Cyclic Synchronous Torque Changed settings become active immediately.	- -6 - 10	INT8 INT16 R/W - -	CANopen 6060:0h Modbus 6918

Setting the input shift time

The parameter for the input shift time is set to the following value:

Parameter name	Value that is written
ECATinpshifttime	250000

7.4.8.1 Additional parameters for the operating mode Cyclic Synchronous Velocity

If you want to use the operating mode Cyclic Synchronous Velocity, the following parameters must be added to the list of startup parameters:

Adapting velocity scaling

The parameters for velocity scaling must be set in the product:

Parameter name	Example
ScaleVELdenom	100
ScaleVELnum	1

Parameter name	Description	Unit Minimum value Factory setting Maximum value	Data type R/W Persistent Expert	Parameter address via fieldbus
ScaleVELdenom	Velocity scaling: Denominator Refer to numerator (ScaleVELnum) for a description. A new scaling is activated when the numerator value is supplied. Setting can only be changed if power stage is disabled.	usr_v 1 1 2147483647	INT32 INT32 R/W per. -	CANopen 3006:21$_h$ Modbus 1602
ScaleVELnum	Velocity scaling: Numerator Specification of the scaling factor: Speed of rotation of motor [min^{-1}] ---------- User-defined units [usr_v] A new scaling is activated when the numerator value is supplied. Setting can only be changed if power stage is disabled. Changed settings become active immediately.	min^{-1} 1 1 2147483647	INT32 INT32 R/W per. -	CANopen 3006:22$_h$ Modbus 1604

Adapting the velocity limitations

Due to the changed velocity scaling, the following parameters must be adapted:
Formula: (ScaleVELdenom/ScaleVELnum) * value of the parameter

Parameter name	Example [1)]
RAMP_v_max	1320000 ((100/1) * 13200)
CTRL_v_max	1320000 ((100/1) * 13200)
MON_v_zeroclamp	1000 ((100/1) * 10)

1) The sample values relate to the factory settings.

0198441113956, V1.00, 07.2013

Parameter name	Description	Unit Minimum value Factory setting Maximum value	Data type R/W Persistent Expert	Parameter address via fieldbus
RAMP_v_max	Maximum velocity of the motion profile for velocity If a greater reference speed is set in one of these operating modes, it is automatically limited to RAMP_v_max. This way, commissioning at limited speed is easier to perform. Setting can only be changed if power stage is disabled. Changed settings become active the next time the motor moves.	usr_v 1 13200 2147483647	UINT32 UINT32 R/W per. -	CANopen 607F:0h Modbus 1554
CTRL_v_max	Velocity limitation During operation, the actual velocity limit is one of the following values (whichever is lowest): - CTRL_v_max - M_n_max - Velocity limitation via digital input Changed settings become active immediately.	usr_v 1 13200 2147483647	UINT32 UINT32 R/W per. -	CANopen 3011:10h Modbus 4384
MON_v_zeroclamp	Velocity limit for Zero Clamp A Zero Clamp operation is only possible if the reference velocity is below the Zero Clamp velocity limit. Changed settings become active immediately.	usr_v 0 10 2147483647	UINT32 UINT32 R/W per. -	CANopen 3006:28h Modbus 1616

Adapting the additional velocity limitations

Due to the changed velocity scaling, the following parameters must be checked.

If a parameter is used in the application, it must be adapted.

0198441113956, V1.00, 07.2013

- Velocities of the operating mode Jog
  - `JOGv_slow`
  - `JOGv_fast`
- Offset movement in the operating mode Electronic Gear
  - `OFSv_target`
- Velocities of the operating mode Homing
  - `HMv`
  - `HMv_out`
- Automatically switching between control parameter sets
  - `CLSET_v_Threshol`
- Limitation of the velocity via digital signal input
  - `IO_v_limit`
- Velocity deviation window
  - `MON_v_DiffWin`
- Velocity threshold value
  - `MON_v_Threshold`
- Velocity window
  - `MON_v_win`
- Velocity for autotuning
  - `AT_v_ref`

0198441113956, V1.00, 07.2013

7.4.9 Setting EtherCAT "Identification"

The following possibilities are available for an EtherCAT "Identification":

- Selection of a value via DIP switch
- Selection of a value via a parameter
- Selection of a value via the TwinCAT system manager

In the TwinCAT system manager, the setting Slave-Register (ADO): 12_h is required (also known as Station Alias).

The parameter `_ECAT_Identification` allows you to read the current setting of the EtherCAT "Identification".

Parameter name	Description	Unit Minimum value Factory setting Maximum value	Data type R/W Persistent Expert	Parameter address via fieldbus
`_ECAT_Identification`	Currently set value of the EtherCAT Identification	- 0 0 65535	UINT16 UINT16 R/- - -	CANopen 3045:C_h Modbus 17688

Setting via DIP switch

A value for an EtherCAT "Identification" (Device ID) can be set via the DIP switches.

The DIP switches can be set to values of 1 ... 4095.

If a value >0 has been set via the DIP switches, it is no longer possible to assign a value via the parameter `ECAT2ndaddress` or via the TwinCAT system manager.

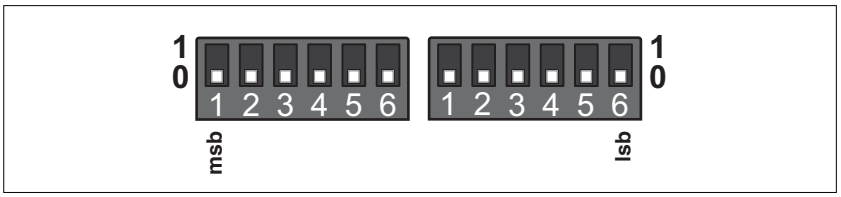

Figure 42: DIP switches

The current settings of the DIP switches can be read via the parameter `_ECAT_DIPswitches`.

Parameter name	Description	Unit Minimum value Factory setting Maximum value	Data type R/W Persistent Expert	Parameter address via fieldbus
`_ECAT_DIPswitches`	EtherCAT Identification value set via DIP switches	- 0 0 65535	UINT16 UINT16 R/- - -	CANopen 3045:B_h Modbus 17686

Setting via parameter.

A value for an EtherCAT "Identification" can be set via the parameter `ECAT2ndaddress`.

The value set via the parameter `ECAT2ndaddress` does not become effective unless the DIP switches are set to the value 0 (factory setting).

0198441113956, V1.00, 07.2013

If a value >0 has been set via the parameter `ECAT2ndaddress`, it is no longer possible to assign a value via the TwinCAT system manager.

Parameter name	Description	Unit Minimum value Factory setting Maximum value	Data type R/W Persistent Expert	Parameter address via fieldbus
`ECAT2ndaddress`	Value for an EtherCAT Identification Value for an EtherCAT "Identification" (also known as "Station Alias"), for example, for the EtherCAT function Hot Connect. Changed settings become active the next time the product is switched on.	- 0 0 65535	UINT16 UINT16 R/W per. -	CANopen 3045:6h Modbus 17676

Setting via TwinCAT system manager

A value for an EtherCAT "Identification" can be set via the TwinCAT system manager.

The value is set by means of the menu item Configured Station Alias.

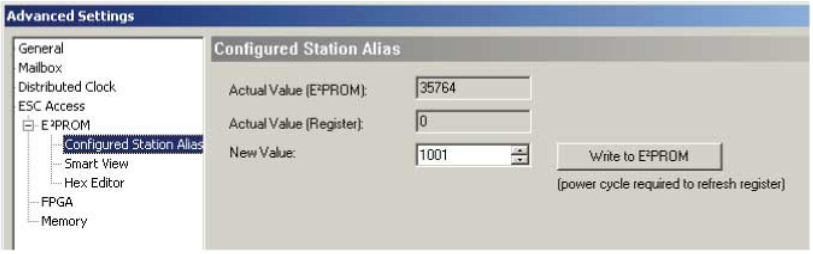

The value set via the TwinCAT system manager does not become effective unless the DIP switches and the parameter `ECAT2ndaddress` are set to the value 0 (factory setting).

0198441113956, V1.00, 07.2013

7.5 Commissioning procedure

7.5.1 Operating state (state diagram)

After switching on and when an operating mode is started, the product goes through a number of operating states.

The state diagram (state machine) shows the relationships between the operating states and the state transitions.

The operating states are internally monitored and influenced by monitoring functions.

Graphical representation The state diagram is represented as a flow chart.

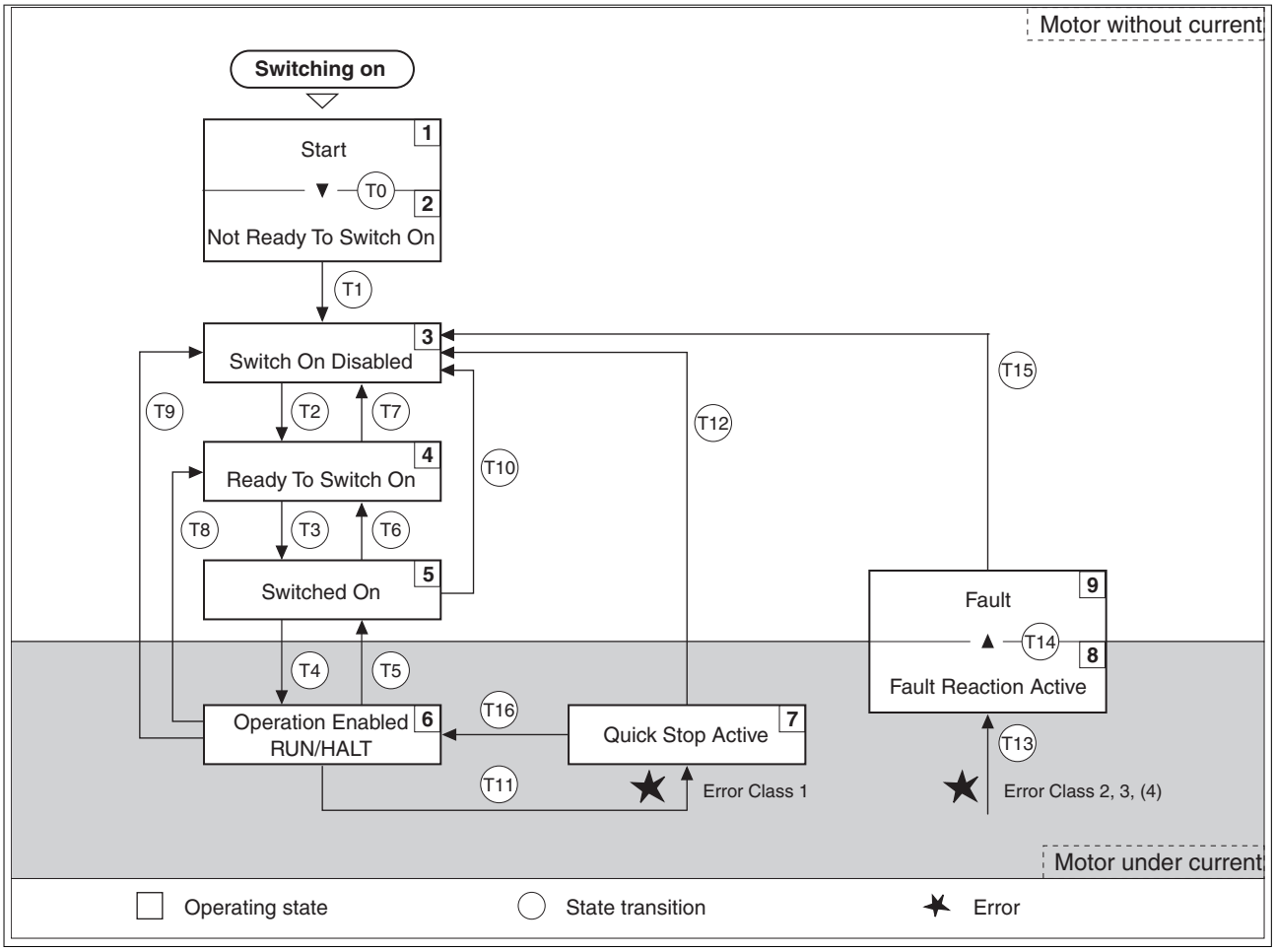

Figure 43: State diagram

Operating states and state transitions See chapter "8.2 Operating states" for detailed information on operating states and state transitions.

0198441113956, V1.00, 07.2013

7.5.2 Setting limit values

Prepare a list with the parameters required for the functions used.

Setting limit values

Suitable limit values must be determined and calculated on the basis of the system and motor data. As long as the motor is operated without loads, the default settings do not need to be changed.

Current limitation

The maximum motor current can be set with the parameter `CTRL_I_max`.

The maximum current for the "Quick Stop" function can be limited with the parameter `LIM_I_maxQSTP` and for the "Halt" function with the parameter `LIM_I_maxHalt`.

- Use the parameter `CTRL_I_max` to set the maximum motor current.
- Use the parameter `LIM_I_maxQSTP` to set the maximum motor current for the "Quick Stop" function.
- Use the parameter `LIM_I_maxHalt` to set the maximum motor current for the "Halt" function.

The motor can be decelerated via a deceleration ramp or the maximum current for the functions "Quick Stop" and "Halt".

The device limits the maximum permissible current on the basis of the motor data and the device data. Even if the value entered for the maximum current in the parameter `CTRL_I_max` is too high, the value is limited.

0198441113956, V1.00, 07.2013

Parameter name	Description	Unit Minimum value Factory setting Maximum value	Data type R/W Persistent Expert	Parameter address via fieldbus
CTRL_I_max	Current limitation During operation, the actual current limit is one of the following values (whichever is lowest): - CTRL_I_max - M_I_max - PA_I_max - Current limitation via digital input Limitations caused by I2t monitoring are also taken into account. Default: PA_I_max at 8 kHz PWM frequency and 230/480 V mains voltage In increments of 0.01 A_{rms}. Changed settings become active immediately.	A_{rms} 0.00 - 463.00	UINT16 UINT16 R/W per. -	CANopen 3011:C_h Modbus 4376
LIM_I_maxQSTP	Current value for Quick Stop This value is only limited by the minimum/maximum value range (no limitation of this value by motor/power stage). In the case of a Quick Stop, the actual current limit (_Imax_actual) is one of the following values (whichever is lowest): - LIM_I_maxQSTP - M_I_max - PA_I_max Further current reductions caused by I2t monitoring are also taken into account during a Quick Stop. Default: PA_I_max at 8 kHz PWM frequency and 230/480 V mains voltage In increments of 0.01 A_{rms}. Changed settings become active immediately.	A_{rms} - - -	UINT16 UINT16 R/W per. -	CANopen 3011:D_h Modbus 4378

0198441113956, V1.00, 07.2013

Parameter name	Description	Unit Minimum value Factory setting Maximum value	Data type R/W Persistent Expert	Parameter address via fieldbus
LIM_I_maxHalt	Current value for Halt This value is only limited by the minimum/ maximum value range (no limitation of this value by motor/power stage). In the case of a Halt, the actual current limit (_Imax_actual) is one of the following values (whichever is lowest): - LIM_I_maxHalt - M_I_max - PA_I_max Further current reductions caused by I2t monitoring are also taken into account during a Halt. Default: PA_I_max at 8 kHz PWM frequency and 230/480 V mains voltage In increments of 0.01 A_{rms}. Changed settings become active immediately.	A_{rms} - - -	UINT16 UINT16 R/W per. -	CANopen 3011:E_h Modbus 4380

Velocity limitation

The parameter CTRL_v_max can be used to limit the maximum velocity.

- Use the parameter CTRL_v_max to set the maximum velocity of the motor.

Parameter name	Description	Unit Minimum value Factory setting Maximum value	Data type R/W Persistent Expert	Parameter address via fieldbus
CTRL_v_max	Velocity limitation During operation, the actual velocity limit is one of the following values (whichever is lowest): - CTRL_v_max - M_n_max - Velocity limitation via digital input Changed settings become active immediately.	usr_v 1 13200 2147483647	UINT32 UINT32 R/W per. -	CANopen 3011:10_h Modbus 4384

0198441113956, V1.00, 07.2013

7.5.3 Digital inputs / outputs

The device has configurable inputs and configurable outputs. See chapter "8.5.2 Setting the digital signal inputs and signal outputs" for additional information.

The signal states of the digital inputs and digital outputs can be displayed via the fieldbus and the commissioning software.

Fieldbus The current signal states are contained in the parameter `_IO_act` in a bit-coded way. The values "1" and "0" correspond to the current signal state of the input or output.

Parameter name	Description	Unit Minimum value Factory setting Maximum value	Data type R/W Persistent Expert	Parameter address via fieldbus
`_IO_act`	Physical status of the digital inputs and outputs Low byte: Bit 0: DI0 Bit 1: DI1 Bit 2: DI2 Bit 3: DI3 High byte: Bit 8: DQ0 Bit 9: DQ1	- - - -	UINT16 UINT16 R/- - -	CANopen 3008:1$_h$ Modbus 2050
`_IO_DI_act`	Status of digital inputs Bit assignments: Bit 0: DI0 Bit 1: DI1 Bit 2: DI2 Bit 3: DI3 Bit 4: DI4 Bit 5: DI5	- - - -	UINT16 UINT16 R/- - -	CANopen 3008:F$_h$ Modbus 2078
`_IO_DQ_act`	Status of digital outputs Bit assignments: Bit 0: DQ0 Bit 1: DQ1	- - - -	UINT16 UINT16 R/- - -	CANopen 3008:10$_h$ Modbus 2080
`_IO_STO_act`	Status of the inputs for the safety function STO Coding of the individual signals: Bit 0: STO_A Bit 1: STO_B	- - - -	UINT16 UINT16 R/- - -	CANopen 3008:26$_h$ Modbus 2124

0198441113956, V1.00, 07.2013

7.5.4 Testing the signals of the limit switches

⚠ WARNING

LOSS OF CONTROL

The use of limit switches can provide some protection against hazards (for example, collision with mechanical stop caused by incorrect reference values).

- If possible, use the limit switches.
- Verify correct connection of the limit switches.
- Verify the correct installation of the limit switches. The limit switches must be mounted in a position far enough away from the mechanical stop to allow for an adequate stopping distance.
- You must release the limit switches before you can use them.
- Verify the correct function of the limit switches.

Failure to follow these instructions can result in death, serious injury or equipment damage.

- ▸ Set up the limit switches in such a way as to keep the motor from overtraveling the limit switches.
- ▸ Trigger the limit switches manually.

Parameters can be used to release the limit switches and to set them up as normally closed contacts or normally open contacts, see chapter "8.7.1 Limit switches".

If possible, use normally closed contacts so that a wire break can be signaled as an error.

0198441113956, V1.00, 07.2013

7.5.5 Testing the safety function STO

Operation with safety function STO

If you want to use the safety function STO, carry out the following steps:

- Power supply has been switched off.
- ▸ Verify that the signal wires at the inputs ($\overline{\texttt{STO_A}}$) and ($\overline{\texttt{STO_B}}$) are isolated from each other. The two signal wires must not be electrically connected.
- Power supply has been switched on.
- ▸ To avoid unintended restart after restoration of power, the parameter `IO_AutoEnable` must be set to "off". Verify that the parameter `IO_AutoEnable` is set to "off".
- ▸ Enable the power stage without starting a motor movement.
- ▸ Trigger the safety function. $\overline{\texttt{STO_A}}$ and $\overline{\texttt{STO_B}}$ must be switched off simultaneously.
- ◁ The power stage is disabled and error message 1300 is entered in the error memory. (NOTE: Error message 1301 indicates a wiring error.)
- ▸ Check the behavior of the drive when errors are detected.
- ▸ Document all tests of the safety function in your acceptance protocol.

Operation without safety function STO

I/O modules with industrial connectors are available without the safety function STO.

If an I/O module without safety function STO is used:

- ▸ Verify that the inputs $\overline{\texttt{STO_A}}$ and $\overline{\texttt{STO_B}}$ are connected to `+24VDC` (see chapter "6.3.4.5 Connection of safety function STO ").

0198441113956, V1.00, 07.2013

7.5.6 Holding brake (option)

⚠ WARNING

LOSS OF BRAKING FORCE DUE TO WEAR OR HIGH TEMPERATURE

Applying the holding brake while the motor is running will cause excessive wear and loss of the braking force.

- Do not use the brake as a service brake.
- Note that a emergency stop may also cause wear.
- Note the maximum number of brake applications and the kinetic energy during braking of moving loads.

Failure to follow these instructions can result in death, serious injury or equipment damage.

Holding brake

The holding brake in the motor has the task of holding the current motor position when the power stage is disabled, even if external forces act (for example, in the case of a vertical axis). The holding brake is not a safety function and not a service brake.

Releasing the holding brake

When the power stage is enabled, current is applied to the motor. When current is applied to the motor, the holding brake is automatically released.

Releasing the holding brake requires a certain amount of time. This time is contained in the electronic nameplate of the motor. Transition to the operating state **6** Operation Enabled is only possible after this time delay has elapsed.

Applying the holding brake

When the power stage is disabled, the holding brake is automatically applied.

Applying the holding brake requires a certain amount of time. This time is contained in the electronic nameplate of the motor. Current remains to be applied to the motor during this time delay.

NOTE: Triggering the STO safety function means that the time delay for motors with holding brake is not effective. The motor cannot generate holding torque to bridge the time to application of the holding brake. Check whether additional measures have to be taken; for example, this may cause the load of vertical axes to lower.

0198441113956, V1.00, 07.2013

7.5.6.1 Releasing the holding brake manually

⚠ WARNING

UNEXPECTED MOVEMENT

Releasing the holding brake may cause an unexpected movement in the system, for example if vertical axes are used.

- Take appropriate measures to avoid damage caused by falling or lowering loads.
- Only run the test if there are no persons or obstacles in the hazardous area.

Failure to follow these instructions can result in death, serious injury or equipment damage.

Mechanical adjustments may require you to manually rotate the motor shaft.

Manual release of the holding brake is only possible in the operating states **3** Switch On Disabled, **4** Ready To Switch On or **9** Fault.

Releasing the holding brake via a signal input

In order to release the holding brake via a signal input, you must first parameterize the signal input function "Release Holding Brake", see chapter "8.5.2 Setting the digital signal inputs and signal outputs".

Releasing the holding brake via the fieldbus

The parameter `BRK_release` can be used to release the holding brake via the fieldbus.

Parameter name	Description	Unit Minimum value Factory setting Maximum value	Data type R/W Persistent Expert	Parameter address via fieldbus
`BRK_release`	Processing of holding brake **0 / Automatic**: Automatic processing **1 / Manual Release**: Manual release of holding brake The holding brake output can only be activated in the operating states 'Switch On Disabled', 'Ready To Switch On' or 'Fault'. If the power stage is active, the value is automatically set to 0. Changed settings become active immediately.	- 0 0 1	UINT16 UINT16 R/W - -	CANopen 3008:A_h Modbus 2068

0198441113956, V1.00, 07.2013

7.5.7 Checking the direction of movement

The direction of movement can be checked by starting a movement.

You can start a movement via the commissioning software or via the signal inputs.

The limit switches must have been wired before a movement can be started.

Direction of movement

Movements are made in positive or in negative directions.
In the case of a rotary motors, direction of movement is defined in accordance with IEC 61800-7-204: Positive direction is when the motor shaft rotates clockwise as you look at the end of the protruding motor shaft.

Checking the direction of movement via the commissioning software

- ■ Power supply has been switched on.
- ▶ Enable the power stage.
- ▶ Start the operating mode Jog.
- ▶ Use the ">" button to trigger a movement in positive direction.
- ◁ A movement is made in positive direction.
- ▶ Use the "<" button to trigger a movement in negative direction.
- ◁ A movement is made in negative direction.

Checking the direction of movement via signal inputs

The signal input functions "Jog Positive With Enable" and "Jog Negative With Enable" enable the power stage, start the operating mode Jog and trigger a movement in positive direction or in negative direction.

The signal input functions "Jog Positive With Enable" and "Jog Negative With Enable" must have been parameterized, see chapter "8.5.2 Setting the digital signal inputs and signal outputs".

- ■ Power supply has been switched on.
- ▶ Use the signal input function "Jog Positive With Enable" to trigger a movement in positive direction.
- ◁ A movement is made in positive direction.
- ▶ Use the signal input function "Jog Negative With Enable" to trigger a movement in negative direction.
- ◁ A movement is made in negative direction.

Changing the direction of movement

If the expected direction of movement and the actual direction of movement are not identical, you can invert the direction of movement.

The parameter `InvertDirOfMove` allows you to invert the direction of movement.

0198441113956, V1.00, 07.2013

Parameter name	Description	Unit Minimum value Factory setting Maximum value	Data type R/W Persistent Expert	Parameter address via field-bus
`InvertDirOfMove`	Inversion of direction of movement **0 / Inversion Off**: Inversion of direction of movement is off **1 / Inversion On**: Inversion of direction of movement is on The limit switch which is reached with a movement in positive direction must be connected to the positive limit switch input and vice versa. Setting can only be changed if power stage is disabled. Changed settings become active the next time the product is switched on.	- 0 0 1	UINT16 UINT16 R/W per. -	CANopen 3006:C_h Modbus 1560

0198441113956, V1.00, 07.2013

7.5.8 Setting parameters for encoder

When starting up, the device reads the absolute position of the motor from the encoder. The current absolute position can be read with the parameter `_p_absENC`.

Parameter name	Description	Unit Minimum value Factory setting Maximum value	Data type R/W Persistent Expert	Parameter address via fieldbus
`_p_absENC`	Absolute position with reference to the encoder range This value corresponds to the modulo position of the absolute encoder range. The value is no longer valid if the gear ratio of machine encoder and motor encoder is changed. A restart is required in such a case.	usr_p - - -	UINT32 UINT32 R/- - -	CANopen 301E:F_h Modbus 7710

If you have replaced the device, you must check the absolute position of the motor. If there is a deviation or if you replace the motor, you must set the absolute position once again.

Working range of the encoder

The working range of the singleturn encoder is 131072 increments per turn.

The working range of the multiturn encoder is is 4096 turns with 131072 increments per turn.

Underrun of absolute position

If a rotary motor performs a movement from 0 into negative direction, there is an underrun of the absolute position of the encoder. However, the actual position keeps counting forward and delivers a negative position value. After switching off and on, the actual position no longer corresponds to the negative position value, but to the absolute position of the encoder.

In the case of applications with a multiturn encoder, an underrun of the absolute position may result in an unexpected actual position during switching on.

The following options are available to adjust the absolute position of the encoder:

- Adjustment of the absolute position
- Shifting the working range

0198441113956, V1.00, 07.2013

7.5.8.1 Adjustment of the absolute position

When the motor is at a standstill, the new absolute position of the motor can be set to the current mechanical motor position the with the parameter `ENC1_adjustment`.

Adjusting the absolute position also shifts the position of the index pulse.

- Set the absolute position at the negative mechanical limit to a position value > 0. This way, the movements remain within the continuous range of the encoder.

Parameter name	Description	Unit Minimum value Factory setting Maximum value	Data type R/W Persistent Expert	Parameter address via fieldbus
`ENC1_adjustment`	Adjustment of absolute position of encoder 1 The value range depends on the encoder type. Singleturn encoder: 0 ... x-1 Multiturn encoder: 0 ... (4096*x)-1 Singleturn encoder (shifted with parameter ShiftEncWorkRang): -(x/2) ... (x/2)-1 Multiturn encoder (shifted with parameter ShiftEncWorkRang): -(2048*x) ... (2048*x)-1 Definition of 'x': Maximum position for one encoder turn in user-defined units. This value is 16384 with the default scaling. NOTE: * If processing is to be performed with inversion of the direction of movement, this must be set before the encoder position is adjusted. * After the write access, a wait time of at least 1 second is required before the drive is switched off. Changed settings become active the next time the product is switched on.	usr_p - - -	INT32 INT32 R/W - -	CANopen 3005:16$_h$ Modbus 1324

0198441113956, V1.00, 07.2013

7.5.8.2 Shifting the working range

The parameter `ShiftEncWorkRang` lets you shift the working range.

Working range without shift

The working range without shift comprises:

Singleturn encoder	0 ... 131071 increments
Multiturn encoder	0 ... 4095 revolutions

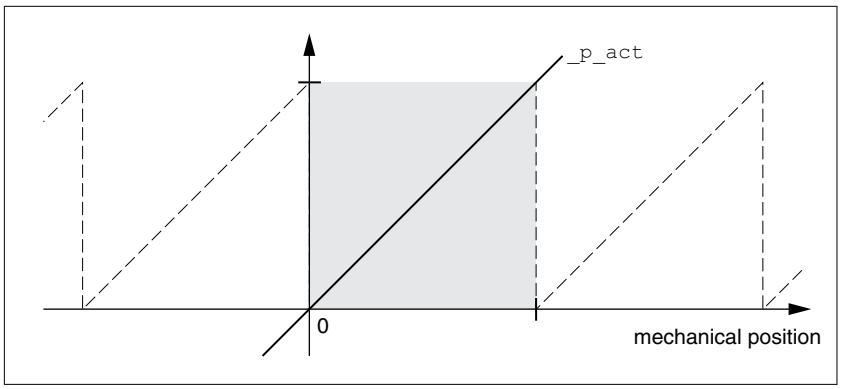

Figure 44: Working range without shift

Working range with shift

The working range with shift comprises:

Singleturn encoder	-65536 ... 65535 increments
Multiturn encoder	-2048 ... 2047 revolutions

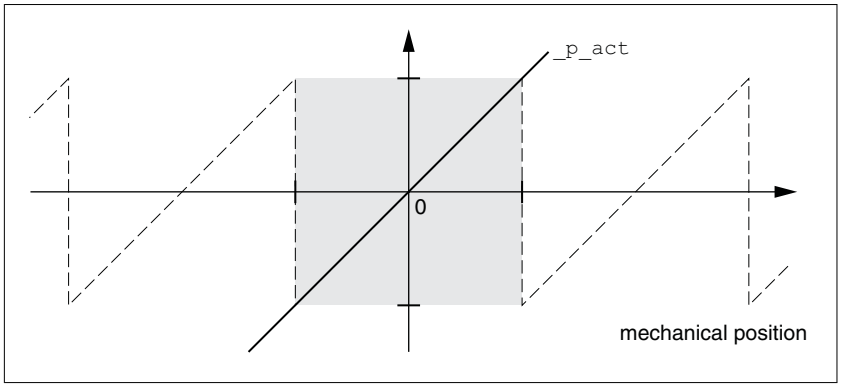

Figure 45: Working range with shift

0198441113956, V1.00, 07.2013

Parameter name	Description	Unit Minimum value Factory setting Maximum value	Data type R/W Persistent Expert	Parameter address via fieldbus
`ShiftEncWorkRang`	Shifting of the encoder working range **0 / Off**: Shifting off **1 / On**: Shifting on Value 0: Position values are between 0 ... 4096 revolutions. Value 1: Position values are between -2048 ... 2048 revolutions. After activating the shifting function, the position range of a multiturn encoder is shifted for half of the range. Example for the position range of a multiturn encoder with 4096 revolutions. Changed settings become active the next time the product is switched on.	- 0 0 1	UINT16 UINT16 R/W per. -	CANopen 3005:21$_h$ Modbus 1346

0198441113956, V1.00, 07.2013

7.5.9 Setting the braking resistor parameters

⚠ WARNING

MOTOR WITHOUT BRAKING EFFECT

An insufficient braking resistor causes overvoltage on the DC bus and switches off the power stage. The motor is no longer actively decelerated.

- Verify that the braking resistor has a sufficient rating.
- Check the parameter settings for the braking resistor.
- Check the I^2t value under the most critical condition by performing a test run. The device switches off at an I^2t value of 100%.
- When performing the calculation and the test run, take into account the fact that the DC bus capacitors can absorb less braking energy at higher mains voltages.

Failure to follow these instructions can result in death, serious injury or equipment damage.

⚠ WARNING

HOT SURFACES

The braking resistor may heat up to over 250°C (480°F) during operation.

- Avoid contact with the hot braking resistor.
- Do not allow flammable or heat-sensitive parts in the immediate vicinity of the braking resistor.
- Provide for good heat dissipation.
- Check the temperature of the braking resistor under the most critical condition by performing a test run.

Failure to follow these instructions can result in death, serious injury or equipment damage.

Further information on braking resistors	Page
Technical data braking resistor	42
Rating the braking resistor	63
Electrical installation of the braking resistor	108
Order data for external braking resistors	467

0198441113956, V1.00, 07.2013

- Check the parameter `RESint_ext`. If you have connected an external braking resistor, you must set the parameter to "external".
- If you have connected an external braking resistor, (value of the parameter `RESint_ext` is set to "external"), you must assign the appropriate values to the parameters `RESext_P`, `RESext_R` and `RESext_ton`. Verify that the selected external braking resistor is really connected.
- Test the function of the braking resistor under realistic, worst case conditions.

If the regenerated power becomes greater than the power that can be absorbed by the braking resistor, an error message is generated and the power stage is disabled.

Parameter name	Description	Unit Minimum value Factory setting Maximum value	Data type R/W Persistent Expert	Parameter address via fieldbus
`RESint_ext`	Selection of type of braking resistor **0 / Standard Braking Resistor**: Standard braking resistor **1 / External Braking Resistor**: External braking resistor **2 / Reserved**: Reserved Setting can only be changed if power stage is disabled. Changed settings become active the next time the power stage is enabled.	- 0 0 2	UINT16 UINT16 R/W per. -	CANopen 3005:9h Modbus 1298
`RESext_P`	Nominal power of external braking resistor Setting can only be changed if power stage is disabled. Changed settings become active the next time the power stage is enabled.	W 1 10 32767	UINT16 UINT16 R/W per. -	CANopen 3005:12h Modbus 1316
`RESext_R`	Resistance value of external braking resistor The minimum value depends on the power stage. In increments of 0.01 Ω. Setting can only be changed if power stage is disabled. Changed settings become active the next time the power stage is enabled.	Ω 0.00 100.00 327.67	UINT16 UINT16 R/W per. -	CANopen 3005:13h Modbus 1318
`RESext_ton`	Maximum permissible switch-on time of external braking resistor Setting can only be changed if power stage is disabled. Changed settings become active the next time the power stage is enabled.	ms 1 1 30000	UINT16 UINT16 R/W per. -	CANopen 3005:11h Modbus 1314

0198441113956, V1.00, 07.2013

7.5.10 Autotuning the device

There are three ways of tuning the drive control loops:

- Easy Tuning: Automatic - autotuning without user intervention. For most applications, autotuning yields good, highly dynamic results.
- Comfort Tuning: Semi-automatic - autotuning with user intervention. Parameters for direction and parameters for damping can be set by the user.
- Manual: The user can set and tune the control loop parameters manually. Expert mode.

Autotuning

Autotuning determines the friction torque as a constantly acting load torque and considers it in the calculation of the moment of inertia of the entire system.

External factors such as a load at the motor are considered. Autotuning optimizes the settings of the control loop parameters; see chapter "7.6 Controller optimization with step response".

Autotuning also supports typical vertical axes.

⚠ WARNING

UNEXPECTED MOVEMENT

Autotuning moves the motor in order to tune the control loops. Incorrect parameters may cause unexpected movements or the loss of monitoring functions.

- Check the parameters `AT_dir` and `AT_dis_usr` (`AT_dis`). The distance required for the deceleration ramp must also be taken into account.
- Verify that the parameter `LIM_I_maxQSTP` for Quick Stop is correctly set.
- If possible, use the limit switches.
- Verify that a functioning button for emergency stop is within reach.
- Only start the system if there are no persons or obstructions in the hazardous area.

Failure to follow these instructions can result in death, serious injury or equipment damage.

During autotuning, the motor is activated and small movements are made. Noise development and mechanical oscillations of the system are normal.

If you want to perform Easy Tuning, no additional parameters need to be set. If you want to perform Comfort Tuning, set the parameters `AT_dir`, `AT_dis_usr` (`AT_dis`) and `AT_mechanics` to meet the requirements of your system.

The parameter `AT_Start` is used to selected between Easy Tuning and Comfort Tuning. When the value is written, autotuning also starts.

▸ Start autotuning via the commissioning software.

0198441113956, V1.00, 07.2013

- Save the new settings to the EEPROM via the commissioning software.

  The product features 2 controller parameter sets that can be parameterized separately. The values for the controller parameters determined during autotuning are stored in controller parameter set 1.

If autotuning cancels with an error message, the default values are used. Change the mechanical position and restart autotuning. If you want to verify the plausibility of the calculated values, you can have them displayed; see chapter
"7.5.11 Enhanced settings for autotuning", page 161.

0198441113956, V1.00, 07.2013

Parameter name	Description	Unit Minimum value Factory setting Maximum value	Data type R/W Persistent Expert	Parameter address via fieldbus
AT_dir	Direction of movement for Autotuning **1 / Positive Negative Home**: Positive direction first, then negative direction with return to initial position **2 / Negative Positive Home**: Negative direction first, then positive direction with return to initial position **3 / Positive Home**: Positive direction only with return to initial position **4 / Positive**: Positive direction only without return to initial position **5 / Negative Home**: Negative direction only with return to initial position **6 / Negative**: Negative direction only without return to initial position Changed settings become active the next time the motor moves.	- 1 1 6	UINT16 UINT16 R/W - -	CANopen 302F:4_h Modbus 12040
AT_dis_usr	Movement range for Autotuning Range within which the control parameters are automatically optimized. The range is entered with reference to the current position. NOTE: In the case of "Movement in one direction only" (Parameter AT_dir), the specified range is used for each optimization step. The actual movement typically corresponds to 20 times the value, but it is not limited. The minimum value, the factory setting and the maximum value depend on the scaling factor. Changed settings become active the next time the motor moves.	usr_p 1 32768 2147483647	INT32 INT32 R/W - -	CANopen 302F:12_h Modbus 12068
AT_dis	Movement range for Autotuning Range within which the control parameters are automatically optimized. The range is entered with reference to the current position. NOTE: In the case of "Movement in one direction only" (Parameter AT_dir), the specified range is used for each optimization step. The actual movement typically corresponds to 20 times the value, but it is not limited. The parameter AT_dis_usr allows you to enter the value in user-defined units. In increments of 0.1 revolution. Changed settings become active the next time the motor moves.	revolution 1.0 2.0 999.9	UINT32 UINT32 R/W - -	CANopen 302F:3_h Modbus 12038

0198441113956, V1.00, 07.2013

Parameter name	Description	Unit Minimum value Factory setting Maximum value	Data type R/W Persistent Expert	Parameter address via fieldbus
AT_mechanical	Type of coupling of the system **1 / Direct Coupling**: Direct coupling **2 / Belt Axis**: Belt axis **3 / Spindle Axis**: Spindle axis Changed settings become active the next time the motor moves.	- 1 2 3	UINT16 UINT16 R/W - -	CANopen 302F:E_h Modbus 12060
AT_start	Autotuning start Value 0: Terminate Value 1: Activate EasyTuning Value 2: Activate ComfortTuning Changed settings become active immediately.	- 0 - 2	UINT16 UINT16 R/W - -	CANopen 302F:1_h Modbus 12034

0198441113956, V1.00, 07.2013

7.5.11 Enhanced settings for autotuning

The following parameters allow you to monitor and influence autotuning.

The parameters `AT_state` and `AT_progress` allow you to monitor the progress and status of autotuning.

Parameter name	Description	Unit Minimum value Factory setting Maximum value	Data type R/W Persistent Expert	Parameter address via fieldbus
`_AT_state`	Autotuning status Bit assignments: Bits 0 ... 10: Last processing step Bit 13: auto_tune_process Bit 14: auto_tune_end Bit 15: auto_tune_err	- - - -	UINT16 UINT16 R/- - -	CANopen 302F:2_h Modbus 12036
`_AT_progress`	Progress of Autotuning	% 0 0 100	UINT16 UINT16 R/- - -	CANopen 302F:B_h Modbus 12054

If, in a test run, you want to check the effects of harder or softer settings of the controller parameters on your system, you can write the parameter `CTRL_GlobGain` to modify the settings determined during autotuning. The parameter `_AT_J` allows you to read the moment of inertia of the entire system calculated during autotuning.

0198441113956, V1.00, 07.2013

Parameter name	Description	Unit Minimum value Factory setting Maximum value	Data type R/W Persistent Expert	Parameter address via fieldbus
CTRL_GlobGain	Global gain factor (affects parameter set 1) The global gain factor affects the following parameters of controller parameter set 1: - CTRL_KPn - CTRL_TNn - CTRL_KPp - CTRL_TAUnref The global gain factor is set to 100% - if the controller parameters are set to default - at the end of the Autotuning process - if the controller parameter set 2 is copied to set 1 via the parameter CTRL_ParSet-Copy NOTE: If a full configuration is transmitted via the fieldbus, the value for CTRL_Glob-Gain must be transmitted prior to the values of the controller parameters CTRL_KPn, CTRL_TNn, CTRL_KPp and CTRL_TAUn-ref. If CTRL_GlobGain is changed during a configuration transmission, CTRL_KPn, CTRL_TNn, CTRL_KPp and CTRL_TAUn-ref must also be part of the configuration. In increments of 0.1 %. Changed settings become active immediately.	% 5.0 100.0 1000.0	UINT16 UINT16 R/W per. -	CANopen 3011:15$_h$ Modbus 4394
_AT_M_friction	Friction torque of the system Is determined during Autotuning. In increments of 0.01 A_{rms}.	A_{rms} - - -	UINT16 UINT16 R/- - -	CANopen 302F:7$_h$ Modbus 12046
_AT_M_load	Constant load torque Is determined during Autotuning. In increments of 0.01 A_{rms}.	A_{rms} - - -	INT16 INT16 R/- - -	CANopen 302F:8$_h$ Modbus 12048
_AT_J	Moment of inertia of the entire system Is automatically calculated during Autotuning. In increments of 0.1 kg cm^2.	kg cm^2 0.1 0.1 6553.5	UINT16 UINT16 R/- per. -	CANopen 302F:C$_h$ Modbus 12056

The parameter AT_wait lets you set a waiting time between the individual autotuning steps. Setting a waiting time is only useful in the case of a low-rigidity coupling, in particular so if the next autotuning step (changing the hardness) is already performed while the system is still settling.

0198441113956, V1.00, 07.2013

Parameter name	Description	Unit Minimum value Factory setting Maximum value	Data type R/W Persistent Expert	Parameter address via fieldbus
AT_wait	Waiting time between Autotuning steps Changed settings become active the next time the motor moves.	ms 300 500 10000	UINT16 UINT16 R/W - -	CANopen 302F:9_h Modbus 12050

0198441113956, V1.00, 07.2013

7.6 Controller optimization with step response

7.6.1 Controller structure

The controller structure corresponds to the classical cascaded closed loop with current controller, velocity controller and position controller. In addition, the reference value of the velocity controller can be smoothed via a filter.

The controllers are tuned one after the other from the "inside" to the "outside" in the following sequence: current control, velocity control, position control. The superimposed control loop remains off.

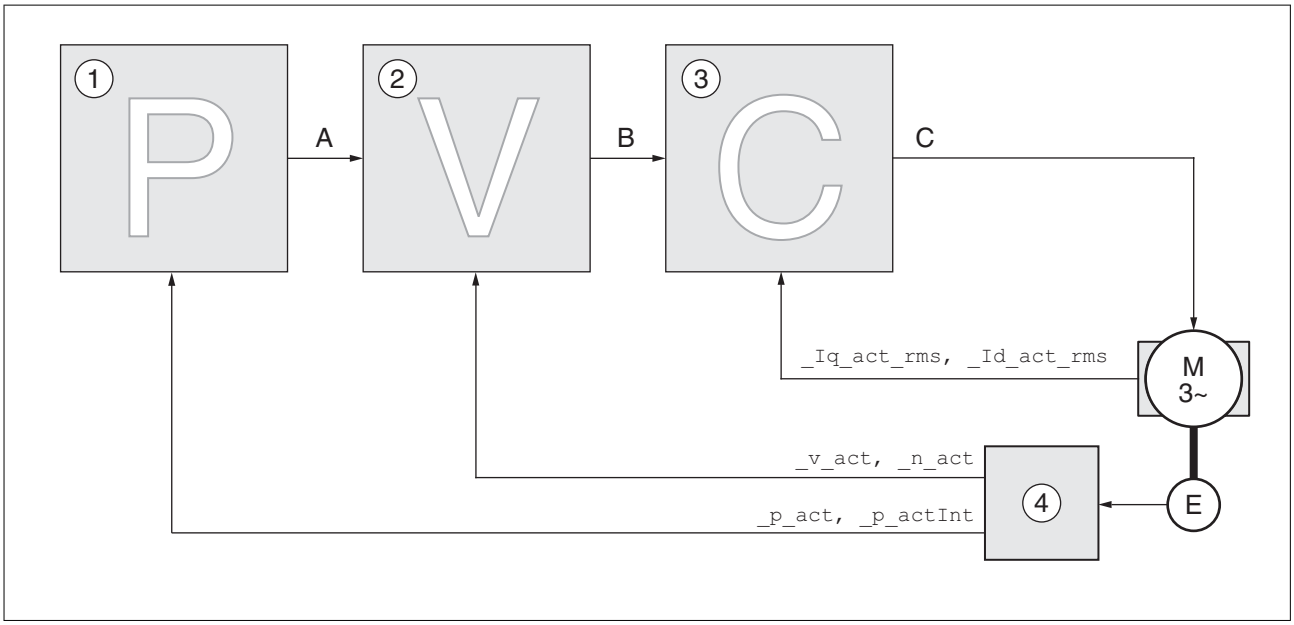

Figure 46: Controller structure

(1) Position controller
(2) Velocity controller
(3) Current controller
(4) Encoder evaluation

See chapter "8.5.5 Setting the controller parameters" for a detailed description of the controller structure.

Current controller The current controller determines the torque of the motor. The current controller is automatically optimally tuned with the stored motor data.

Velocity controller The velocity controller controls the motor velocity by varying the motor current depending on the load situation. The velocity controller has a decisive influence on the dynamic response of the drive. The dynamics of the velocity controller depend on:

- Moment of inertia of the drive and the controlled system
- Power of the motor
- Stiffness and elasticity of the elements in the flow of forces
- Backlash of the drive elements
- Friction

Position controller The position controller reduces the difference between the reference position and the actual position of the motor (position deviation) to a

0198441113956, V1.00, 07.2013

minimum. When the motor is at a standstill, the position deviation is close to zero in the case of a well-tuned position controller.

An optimized velocity control loop is a prerequisite for good amplification of the position controller.

Controller parameter sets

This device allows you to use two controller parameter sets. It is possible to switch form one set of controller parameters to the other during operation. The active controller parameter set is selected with the parameter `CTRL_SelParSet`.

The corresponding parameters are `CTRL1_xx` for the first controller parameter set and `CTRL2_xx` for the second controller parameter set. The following descriptions use the notation `CTRL1_xx` (`CTRL2_xx`) if there are no functional differences between the two controller parameter sets.

Parameter name	Description	Unit Minimum value Factory setting Maximum value	Data type R/W Persistent Expert	Parameter address via fieldbus
`CTRL_SelParSet`	Selection of controller parameter set (non-persistent) Coding see parameter: CTRL_PwrUpParSet Changed settings become active immediately.	- 0 1 2	UINT16 UINT16 R/W - -	CANopen 3011:19$_h$ Modbus 4402
`_CTRL_ActParSet`	Active controller parameter set Value 1: Controller parameter set 1 is active Value 2: Controller parameter set 2 is active A controller parameter set is active after the time for the parameter switching (CTRL_ParChgTime) has elapsed.	- - - -	UINT16 UINT16 R/- - -	CANopen 3011:17$_h$ Modbus 4398
`CTRL_ParChgTime`	Period of time for parameter switching In the case of parameter set switching, the values of the following parameters are changed gradually: - CTRL_KPn - CTRL_TNn - CTRL_KPp - CTRL_TAUnref - CTRL_TAUiref - CTRL_KFPp Such a parameter switching can be caused by - change of the active controller parameter set - change of the global gain - change of any of the parameters listed above - switching off the integral term of the velocity controller Changed settings become active immediately.	ms 0 0 2000	UINT16 UINT16 R/W per. -	CANopen 3011:14$_h$ Modbus 4392

7.6.2 Optimization

The drive optimization function matches the device to the application conditions. The following options are available:

0198441113956, V1.00, 07.2013

- Selecting control loops. Superimposed control loops are automatically deactivated.
- Defining reference value signals: signal type, amplitude, frequency and starting point
- Testing control performance with the signal generator.
- Recording the control performance on screen and evaluating it with the commissioning software.

Determining the mechanical system of the system

To assess and optimize the transient response behavior of your system, group its mechanical system into one of the following two categories.

- System with rigid mechanical system
- System with a less rigid mechanical system

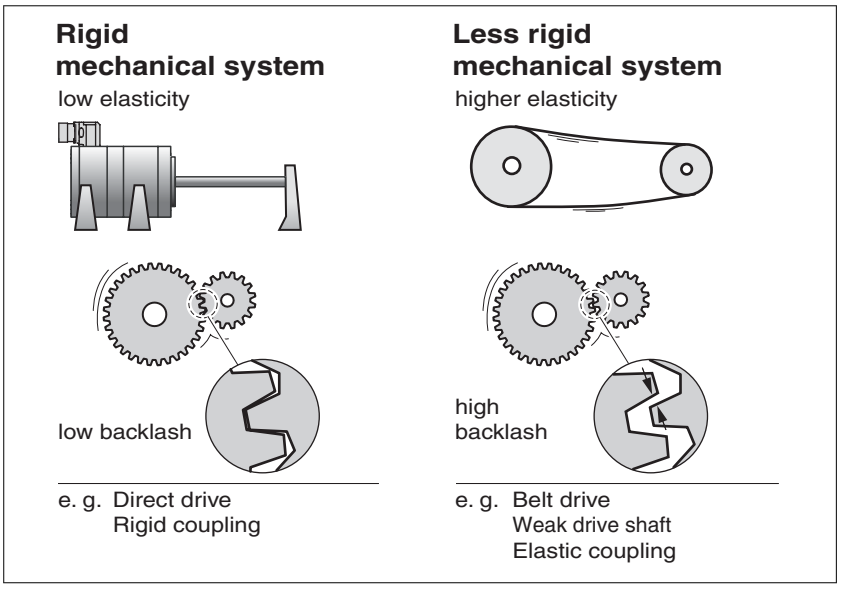

Figure 47: Rigid and less rigid mechanical systems

- ▸ Couple the motor and the mechanical system
- ▸ If you use limit switches: verify the function of the limit switches after installation of the motor.

Setting reference value signals

- ▸ Start controller optimization with the commissioning software.
- ▸ Set the following values for the reference value signal:
- Signal type: Step "positive"
- Amplitude: 100 min^{-1}
- Cycle duration: 100 ms
- Number of repetitions: 1
- ▸ Start the trace.

Only the signal types "Step" and "Square" allow you to determine the entire dynamic behavior of a control loop. The manual shows signal paths for the signal type "Step".

Entering controller values

The optimization steps described on the following pages require you to enter control loop parameters and test their effect by triggering a step function.

A step function is triggered as soon as you start a trace in the commissioning software.

0198441113956, V1.00, 07.2013

Controller parameter sets

This device allows you to use two controller parameter sets. It is possible to switch form one set of controller parameters to the other during operation. The active controller parameter set is selected with the parameter `CTRL_SelParSet`.

The corresponding parameters are `CTRL1_xx` for the first controller parameter set and `CTRL2_xx` for the second controller parameter set. The following descriptions use the notation `CTRL1_xx` (`CTRL2_xx`) if there are no functional differences between the two controller parameter sets.

7.6.3 Optimizing the velocity controller

Optimum settings of complex mechanical control systems require hands-on experience with controller tuning . This includes the ability to calculate control loop parameters and to apply identification procedures.

Less complex mechanical systems can often be successfully optimized by means of experimental adjustment using the aperiodic limit method. The following parameters are used for this:

0198441113956, V1.00, 07.2013

Parameter name	Description	Unit Minimum value Factory setting Maximum value	Data type R/W Persistent Expert	Parameter address via fieldbus
CTRL1_KPn	Velocity controller P gain The default value is calculated on the basis of the motor parameters. In the case of switching between the two controller parameter sets, the values are adapted linearly over the time defined in the parameter CTRL_ParChgTime. In increments of 0.0001 A/min^{-1}. Changed settings become active immediately.	A/min^{-1} 0.0001 - 2.5400	UINT16 UINT16 R/W per. -	CANopen 3012:1$_h$ Modbus 4610
CTRL2_KPn	Velocity controller P gain The default value is calculated on the basis of the motor parameters. In the case of switching between the two controller parameter sets, the values are adapted linearly over the time defined in the parameter CTRL_ParChgTime. In increments of 0.0001 A/min^{-1}. Changed settings become active immediately.	A/min^{-1} 0.0001 - 2.5400	UINT16 UINT16 R/W per. -	CANopen 3013:1$_h$ Modbus 4866
CTRL1_TNn	Velocity controller integral action time The default value is calculated. In the case of switching between the two controller parameter sets, the values are adapted linearly over the time defined in the parameter CTRL_ParChgTime. In increments of 0.01 ms. Changed settings become active immediately.	ms 0.00 - 327.67	UINT16 UINT16 R/W per. -	CANopen 3012:2$_h$ Modbus 4612
CTRL2_TNn	Velocity controller integral action time The default value is calculated. In the case of switching between the two controller parameter sets, the values are adapted linearly over the time defined in the parameter CTRL_ParChgTime. In increments of 0.01 ms. Changed settings become active immediately.	ms 0.00 - 327.67	UINT16 UINT16 R/W per. -	CANopen 3013:2$_h$ Modbus 4868

Check and optimize the calculated values in a second step, as described on page 172.

NOTE: The procedure for optimization of the settings is only a suggestion. It is the responsibility of the user to decide whether the method is suitable for the actual application.

0198441113956, V1.00, 07.2013

Determining controller parameter values for rigid mechanical systems

In the case of a rigid mechanical system, adjusting the control performance on the basis of the table is possible if:

- the moment of inertia of the load and of the motor are known and
- the moment of inertia of the load and of the motor are constant

The P gain `CTRL_KPn` and the integral action time `CTRL_TNn` depend on:

- J_L: moment of inertia of the load
- J_M: moment of inertia of the motor
- ▸ Determine the controller parameter values using Table 5:

	J_L= J_M		**J_L= 5 * J_M**		**J_L= 10 * J_M**	
J_L[kgcm^2]	**KPn**	**TNn**	**KPn**	**TNn**	**KPn**	**TNn**
1	0.0125	8	0.008	12	0.007	16
2	0.0250	8	0.015	12	0.014	16
5	0.0625	8	0.038	12	0.034	16
10	0.125	8	0.075	12	0.069	16
20	0.25	8	0.15	12	0.138	16

Table 5: Determining controller values

Switching off the reference value filter of the velocity controller

The reference value filter of the velocity controller allows you to improve the transient response at optimized velocity control. The reference value filter must be switched off for the first setup of the velocity controller.

- ▸ Deactivate the reference value filter of the velocity controller. Set the parameter `CTRL1_TAUnref` (`CTRL2_TAUnref`) to the lower limit value "0".

Parameter name	**Description**	**Unit** **Minimum value** **Factory setting** **Maximum value**	**Data type** **R/W** **Persistent** **Expert**	**Parameter address via fieldbus**
`CTRL1_TAUnref`	Filter time constant of the reference velocity value filter In the case of switching between the two controller parameter sets, the values are adapted linearly over the time defined in the parameter CTRL_ParChgTime. In increments of 0.01 ms. Changed settings become active immediately.	ms 0.00 1.81 327.67	UINT16 UINT16 R/W per. -	CANopen 3012:4$_h$ Modbus 4616
`CTRL2_TAUnref`	Filter time constant of the reference velocity value filter In the case of switching between the two controller parameter sets, the values are adapted linearly over the time defined in the parameter CTRL_ParChgTime. In increments of 0.01 ms. Changed settings become active immediately.	ms 0.00 1.81 327.67	UINT16 UINT16 R/W per. -	CANopen 3013:4$_h$ Modbus 4872

0198441113956, V1.00, 07.2013

Determining controller parameter values for rigid mechanical systems

For optimization purposes, determine the P gain of the velocity controller at which the controller adjusts velocity `_v_act` as quickly as possible without overshooting.

- Set the integral action time `CTRL1_TNn` (`CTRL2_TNn`) to infinite (= 327.67 ms).

If a load torque acts on the motor when the motor is at a standstill, the integral action time must not exceed a value that causes uncontrolled change of the motor position.

If the motor is subject to loads when it is at a standstill, setting the integral action time to "infinite" may cause position deviations. Reduce the integral action time if the deviation is unacceptable in your application. However, reducing the integral action time can adversely affect optimization results.

⚠ WARNING

UNEXPECTED MOVEMENT

The step function moves the motor at constant velocity until the specified time has expired.

- Verify that the selected values for velocity and time do not exceed the available distance.
- If possible, use limit switches.
- Verify that a functioning button for emergency stop is within reach.
- Verify that the system is free and ready for the movement before starting the function.

Failure to follow these instructions can result in death, serious injury or equipment damage.

- Initiate a step function.
- After the first test, check the maximum amplitude for the reference value for the current `_Iq_ref`.

Set the amplitude of the reference value just high enough so the reference value for the current `_Iq_ref` remains below the maximum value `CTRL_I_max`. On the other hand, the value selected should not be too low, otherwise friction effects of the mechanical system will determine the performance of the control loop.

- Trigger another step function if you had to modify `_v_ref` and check the amplitude of `_Iq_ref`.
- Increase or decrease the P gain in small increments until `_v_act` is obtained as fast as possible. The following diagram shows the required transient response on the left. Overshooting - as shown on the right - is reduced by reducing `CTRL1_KPn` (`CTRL2_KPn`).

Differences between `_v_ref` and `_v_act` result from setting `CTRL1_TNn` (`CTRL2_TNn`) to "Infinite".

0198441113956, V1.00, 07.2013

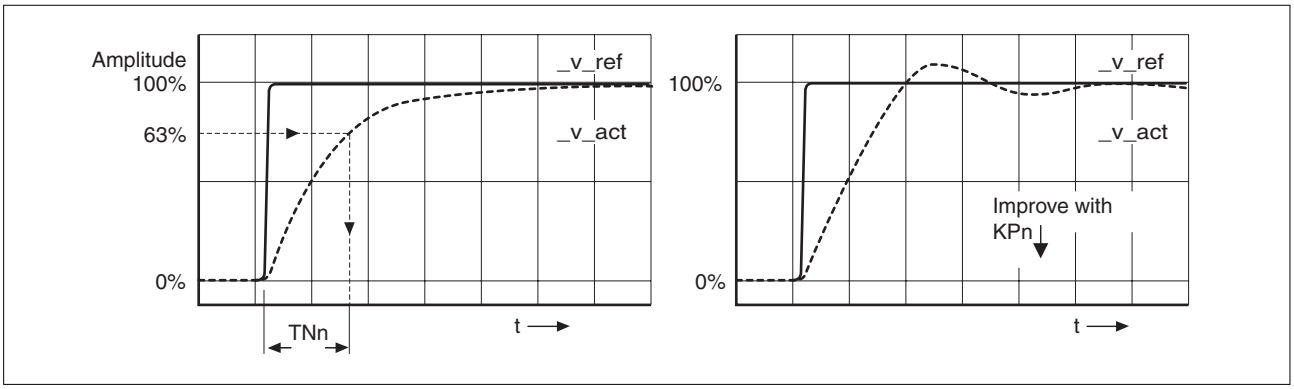

Figure 48: Determining "TNn" for the aperiodic limit

In the case of drive systems in which oscillations occur before the aperiodic limit is reached, the P gain "KPn" must be reduced until oscillations can no longer be detected. This occurs frequently in the case of linear axes with a toothed belt drive.

Graphic determination of the 63% value

Graphically determine the point at which the actual velocity `_v_act` reaches 63% of the final value. The integral action time `CTRL1_TNn` (`CTRL2_TNn`) then results as a value on the time axis. The commissioning software supports you with the evaluation:

Parameter name	Description	Unit Minimum value Factory setting Maximum value	Data type R/W Persistent Expert	Parameter address via fieldbus
`CTRL1_TNn`	Velocity controller integral action time The default value is calculated. In the case of switching between the two controller parameter sets, the values are adapted linearly over the time defined in the parameter CTRL_ParChgTime. In increments of 0.01 ms. Changed settings become active immediately.	ms 0.00 - 327.67	UINT16 UINT16 R/W per. -	CANopen 3012:2h Modbus 4612
`CTRL2_TNn`	Velocity controller integral action time The default value is calculated. In the case of switching between the two controller parameter sets, the values are adapted linearly over the time defined in the parameter CTRL_ParChgTime. In increments of 0.01 ms. Changed settings become active immediately.	ms 0.00 - 327.67	UINT16 UINT16 R/W per. -	CANopen 3013:2h Modbus 4868

0198441113956, V1.00, 07.2013

7.6.4 Checking and optimizing default settings

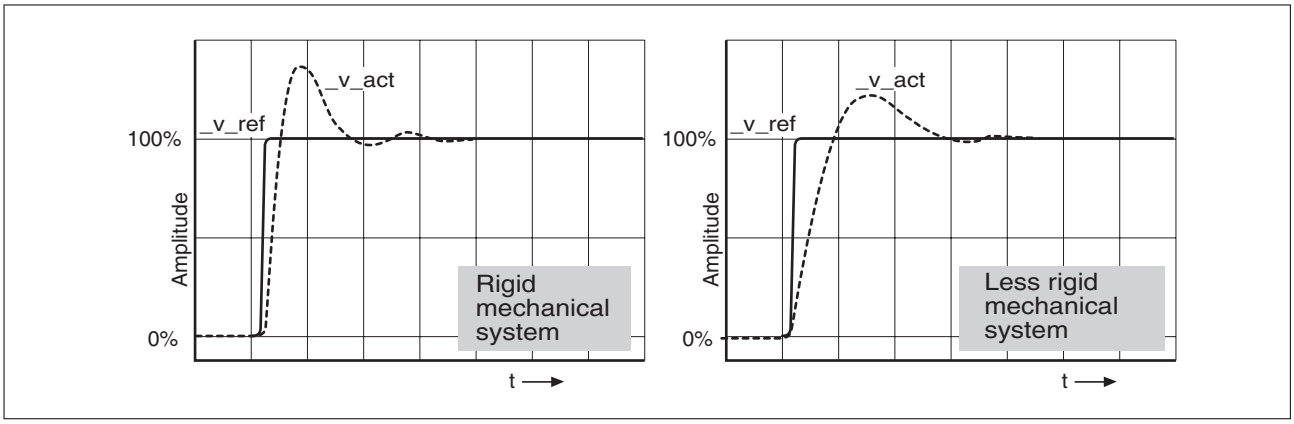

Figure 49: Step responses with good control performance

The controller is properly set when the step response is approximately identical to the signal shown. Good control performance is characterized by

- Fast transient response
- Overshooting up to a maximum of 40%, 20% is recommended.

If the control performance does not correspond to the curve shown, change `CTRL_KPn` in increments of about 10% and then trigger another step function:

- If the control is too slow: Use a higher `CTRL1_KPn` (`CTRL2_KPn`) value.
- If the control tends to oscillate: Use a lower `CTRL1_KPn` (`CTRL2_KPn`) value.

Oscillation ringing is characterized by continuous acceleration and deceleration of the motor.

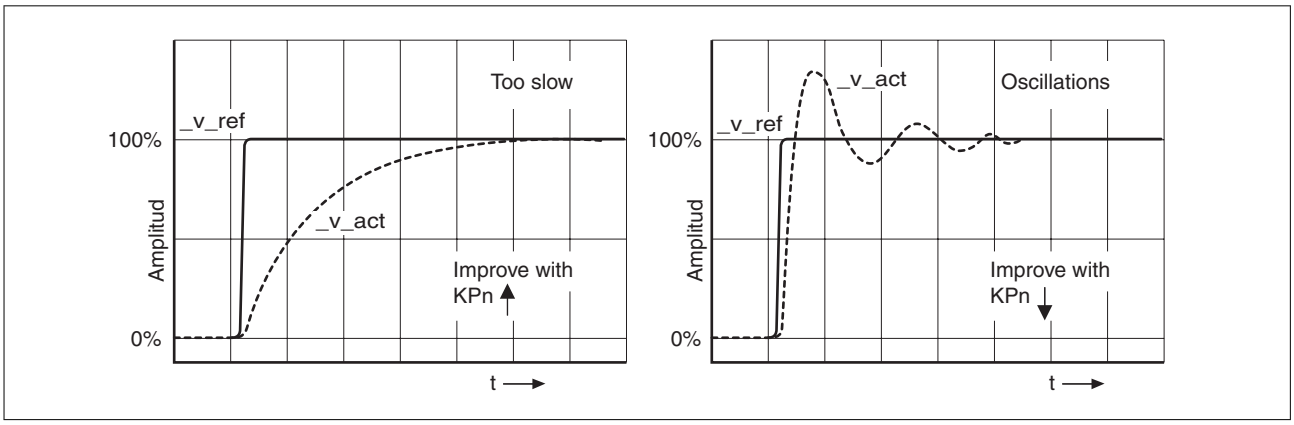

Figure 50: Optimizing insufficient velocity controller settings

If the controller performance remains unsatisfactory in spite of optimization, contact your local sales representative.

0198441113956, V1.00, 07.2013

7.6.5 Optimizing the position controller

An optimized subordinate velocity controller is a prerequisite for optimization of the position controller.

When tuning the position controller, you must optimize the P gain `CTRL1_KPp` (`CTRL2_KPp`) in two limits:

- `CTRL1_KPp` (`CTRL2_KPp`) too high: Overshooting of the mechanical system, instability of the closed-loop control
- `CTRL1_KPp` (`CTRL2_KPp`) too low: High position deviation

Parameter name	Description	Unit Minimum value Factory setting Maximum value	Data type R/W Persistent Expert	Parameter address via fieldbus
`CTRL1_KPp`	Position controller P gain The default value is calculated. In the case of switching between the two controller parameter sets, the values are adapted linearly over the time defined in the parameter CTRL_ParChgTime. In increments of 0.1 1/s. Changed settings become active immediately.	1/s 2.0 - 900.0	UINT16 UINT16 R/W per. -	CANopen 3012:3h Modbus 4614
`CTRL2_KPp`	Position controller P gain The default value is calculated. In the case of switching between the two controller parameter sets, the values are adapted linearly over the time defined in the parameter CTRL_ParChgTime. In increments of 0.1 1/s. Changed settings become active immediately.	1/s 2.0 - 900.0	UINT16 UINT16 R/W per. -	CANopen 3013:3h Modbus 4870

⚠ WARNING

UNEXPECTED MOVEMENT

The step function moves the motor at constant velocity until the specified time has expired.

- Verify that the selected values for velocity and time do not exceed the available distance.
- If possible, use limit switches.
- Verify that a functioning button for emergency stop is within reach.
- Verify that the system is free and ready for the movement before starting the function.

Failure to follow these instructions can result in death, serious injury or equipment damage.

0198441113956, V1.00, 07.2013

Setting the reference value signal

- Select Position Controller as the reference value in the commissioning software.
- Set the reference signal:
- Signal type: "Step"
- For rotary motors: Set the amplitude to approx. 1/10 motor revolution.

The amplitude is entered in user-defined units. With the default scaling, the resolution is 16384 usr per motor revolution.

Selecting the trace signals

- Select the values in the box General Trace Parameters:
- Reference position of position controller `_p_refusr` (`_p_ref`)
- Actual position of position controller `_p_actusr` (`_p_act`)
- Actual velocity `_v_act`
- Reference value current `_Iq_ref`

Optimizing the position controller value

- Trigger a step function with the default controller values.
- After the first test, check the values achieved for `_v_act` and `_Iq_ref` for current and velocity control. The values must not reach the current and velocity limitation range.

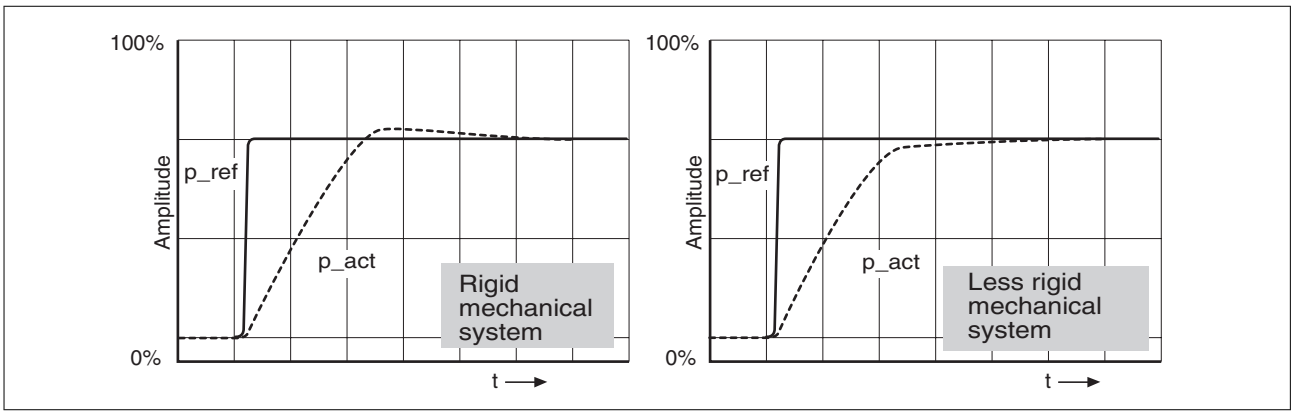

Figure 51: Step responses of a position controller with good control performance

The p gain setting `CTRL1_KPp` (`CTRL2_KPp`) is optimal if the reference value is reached rapidly and with little or no overshooting.

If the control performance does not correspond to the curve shown, change the P gain `CTRL1_KPp` (`CTRL2_KPp`) in increments of approximately 10% and trigger another step function.

- If the control tends to oscillate: Use a lower KPp value.
- If the actual value is too slow reaching the reference value: Use a higher KPp value.

0198441113956, V1.00, 07.2013

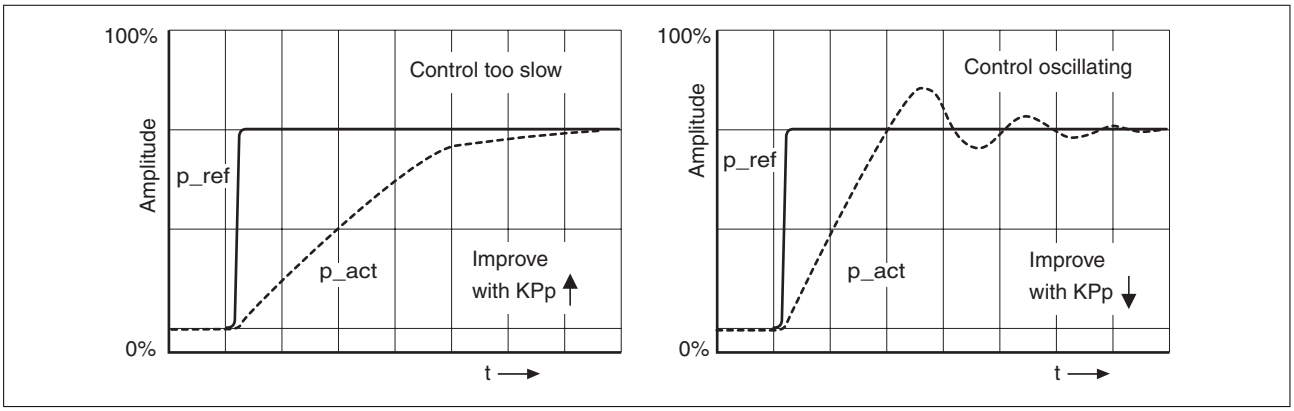

Figure 52: Optimizing inadequate position controller settings

0198441113956, V1.00, 07.2013

7.7 Memory Card

The devices features a cad holder for a memory card. The parameters stored on the memory card can be transferred to other devices. If a device is replaced, a new device of the same type can be operated with identical parameters.

The contents of the memory card is compared to the parameters stored in the device when the device is switched on.

When the parameters are written to the EEPROM, they are also saved to the memory card.

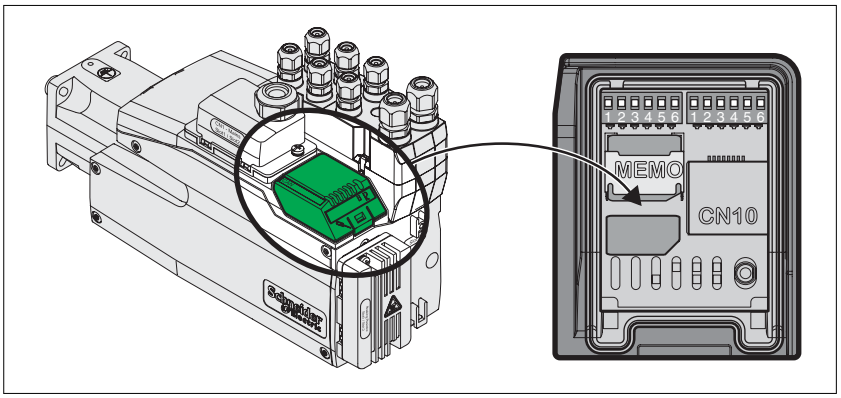

Figure 53: Card holder for memory card

Note the following:

- Use only genuine accessory memory cards.
- Do not touch the gold contacts.
- The insert/remove cycles of the memory card are limited.
- The memory card can remain in the device.
- The memory card can only be removed from the device by pulling (not by pushing).

Inserting a memory card

■ Power supply has been switched off.

▶ Place the memory card in front of the the card holder. The slanted corner must be aligned as shown on the printed circuit board. Push the memory card into the device.

▶ Switch on the power supply.

Observe the memory card LED during the initialization of the device. See chapter "10.1.3 Memory card LEDs" for information on the meaning of the LED signals.

0198441113956, V1.00, 07.2013

7.7.1 Data exchange with the memory card

Writing data to the memory card

- ■ The memory card is empty. Power supply has been switched off.
- ▶ Insert the memory card. The slanted corner must be aligned as shown on the printed circuit board.
- ▶ Switch on the power supply.
- ◁ The device data is transferred to the memory card. Observe the memory card LED and the error memory of the device.

Transferring data from the memory card to the device

- ■ The memory card contains a parameter set of a device with the same fieldbus and of the same size. Power supply has been switched off.
- ▶ Insert the memory card. The slanted corner must be aligned as shown on the printed circuit board.
- ▶ Switch on the power supply.
- ◁ The data on the memory card is transferred to the device. Observe the memory card LED and the error memory of the device.
- ▶ Check the fieldbus address settings.
- ▶ Switch the power supply off and on again to apply the new configuration.

Memory card has been removed

If there is no memory card in the device (or if the memory card has not been detected), the memory card LED is off.

Write protection for memory card

It is possible to write-protect the memory card. For example, you may want to write-protect memory cards used for regular duplication of device data.

Memory cards are write-protected via the commissioning software.

0198441113956, V1.00, 07.2013

7.8 Duplicating existing device settings

Application

- FDR (Fast Device Replacement)
- Duplication device settings (series production)

Prerequisites

Device type, motor type and device firmware must be identical.
Tools for duplication:

- Memory card
- Commissioning software (for Windows)

The power supply of the device must be switched on.

Duplication using a memory card

Device settings can be stored on a memory card (accessories). The stored device settings can be copied to a device of the same type. Note that the device address and the settings for the monitoring functions are copied along with this information. See chapter "Transferring data from the memory card to the device", page 177 for additional information.

Duplication using the commissioning software

The commissioning software installed on a PC can save the settings of a device in the form of a configuration file. The stored device settings can be copied to a device of the same type. Note that the device address and the settings for the monitoring functions are copied along with this information. See the manual for the commissioning software or the online help for additional information.

0198441113956, V1.00, 07.2013

7.9 Resetting the user parameters

The user parameters are reset by means of the parameter `PARuserReset`.

- Disconnect the product from the the fieldbus in order to avoid conflicts by simultaneous access.

Parameter name	Description	Unit Minimum value Factory setting Maximum value	Data type R/W Persistent Expert	Parameter address via fieldbus
`PARuserReset`	Reset user parameters **0 / No**: No **65535 / Yes**: Yes Bit 0: Set persistent user and controller parameters to default values Bits 1 ... 15: Reserved The parameters are reset with the exception of: - Communication parameters - Inversion of direction of movement - Functions of digital inputs and outputs NOTE: The new settings are not saved to the EEPROM. Setting can only be changed if power stage is disabled. Changed settings become active the next time the power stage is enabled.	- 0 - 65535	UINT16 UINT16 R/W - -	CANopen 3004:8$_h$ Modbus 1040

Resetting via the commissioning software

Use the menu items "Device -> User Functions -> Reset User Parameters" in the commissioning software to reset the user parameters.

If the device transitions to the operating state
2 Not Ready To Switch On after the user parameters are reset, the new settings only become active until after the device is switched off and on again.

0198441113956, V1.00, 07.2013

7.10 Restoring factory settings

The parameter values set by the user are lost in this process.
The commissioning software allows you to save the parameter values set for a device as a configuration file.

The factory settings are restored by means of the parameter `PARfactorySet`.

- Disconnect the product from the the fieldbus in order to avoid conflicts by simultaneous access.

Parameter name	Description	Unit Minimum value Factory setting Maximum value	Data type R/W Persistent Expert	Parameter address via fieldbus
`PARfactorySet`	Restore factory settings (default values) **No**: No **Yes**: Yes The parameters are reset to the factory settings and subsequently saved to the EEPROM. The factory settings can be restored via the HMI or the commissioning software. The saving process is complete when the parameter is read and 0 is returned. Setting can only be changed if power stage is disabled. Changed settings become active the next time the product is switched on.	- 0 - 1	R/W - -	

Factory settings via commissioning software

Use the menu items "Device -> User Functions -> Restore factory Settings" in the commissioning software to restore the factory settings.

The new settings only become active until after the device is switched off and on again.

0198441113956, V1.00, 07.2013

8 Operation

8

The chapter "Operation" describes the basic operating states, operating modes and functions of the device.

⚠ WARNING

UNINTENDED BEHAVIOR

Unsuitable settings or unsuitable data may trigger unexpected movements, trigger signals, damage parts and disable monitoring functions.

- Do not operate the drive system with unknown settings or data.
- Verify that the stored data and settings are correct.
- When commissioning, carefully run tests for all operating states and potential error situations.
- Verify the functions after replacing the product and also after making changes to the settings or data.
- Only start the system if there are no persons or obstructions in the hazardous area.

Failure to follow these instructions can result in death, serious injury or equipment damage.

Access channels

"8.1 Access channels"

Operating states

"8.2 Operating states"
"8.2.1 State diagram"
"8.2.2 State transitions"
"8.2.3 Indication of the operating state"
"8.2.4 Changing the operating state"

Operating modes

"8.3 Operating modes"
"8.3.1 Starting and changing an operating mode"
"8.3.2 Operating mode Jog"
"8.3.3 Operating mode Profile Torque"
"8.3.4 Operating mode Profile Velocity"
"8.3.5 Operating mode Profile Position"
"8.3.6 Operating mode Homing"
"8.3.7 Operating mode Cyclic Synchronous Torque"
"8.3.8 Operating mode Cyclic Synchronous Velocity"
"8.3.9 Operating mode Cyclic Synchronous Position"

0198441113956, V1.00, 07.2013

Movement range

"8.4 Movement range"
"8.4.1 Zero point of the movement range"
"8.4.2 Movement beyond the movement range"
"8.4.3 Setting a modulo range"

Extended settings

"8.5 Extended settings"
"8.5.1 Scaling"
"8.5.2 Setting the digital signal inputs and signal outputs"
"8.5.3 Setting backlash compensation"
"8.5.4 Setting the motion profile for the velocity"
"8.5.5 Setting the controller parameters"
"8.5.6 Settings of parameter `_DCOMstatus`"

Functions for target value processing

"8.6 Functions for target value processing"
"8.6.1 Stop movement with Halt"
"8.6.2 Stopping a movement with Quick Stop"
"8.6.3 Limitation of the velocity via signal inputs"
"8.6.4 Limitation of the current via signal inputs"
"8.6.5 Jerk limitation"
"8.6.6 Zero Clamp"
"8.6.7 Setting a signal output via parameter"
"8.6.8 Starting a movement via a signal input"
"8.6.9 Position capture via signal input"
"8.6.10 Relative Movement After Capture (RMAC)"

Functions for monitoring movements

"8.7 Functions for monitoring movements"
"8.7.1 Limit switches"
"8.7.2 Reference switch"
"8.7.3 Software limit switches"
"8.7.4 Load-dependent position deviation (following error)"
"8.7.5 Motor standstill and direction of movement"
"8.7.6 Torque window"
"8.7.7 Velocity window"
"8.7.8 Standstill window"
"8.7.9 Position register"
"8.7.10 Position deviation window"
"8.7.11 Velocity deviation window"
"8.7.12 Velocity threshold value"
"8.7.13 Current threshold value"

0198441113956, V1.00, 07.2013

Functions for monitoring internal device signals

"8.8 Functions for monitoring internal device signals"
"8.8.1 Temperature monitoring"
"8.8.2 Monitoring load and overload (I^2t monitoring)"
"8.8.3 Commutation monitoring"
"8.8.4 Monitoring of mains phases"
"8.8.5 Ground fault monitoring"

0198441113956, V1.00, 07.2013

8.1 Access channels

⚠ WARNING

UNINTENDED BEHAVIOR CAUSED BY ACCESS CONTROL

Improper use of access control may cause commands to be triggered or blocked.

- Verify that no unintended behavior is caused as a result of enabling or disabling exclusive access.
- Verify that impermissible access is blocked.
- Verify that required access is available.

Failure to follow these instructions can result in death, serious injury or equipment damage.

The product can be addressed via different access channels. Access channels are:

- Fieldbus
- Commissioning software
- Digital input signals

If several access channels are active at the same time, this may lead to unintended behavior.

The product allows you to work with exclusive access which limits access to the product via a single access channel.

Only one access channel can have exclusive access to the product. An exclusive access can be provided via different access channels:

- Via a fieldbus:

  Exclusive access is provided to a fieldbus by blocking the other access channels with the parameter `AccessLock`.
- Via the commissioning software:

  The commissioning software receives exclusive access via the switch "Exclusive access" in position "On".

When the product is switched on, there is no exclusive access via an access channel.

The signal input functions "Halt", "Fault Reset", "Enable", "Positive Limit Switch (LIMP)", "Negative Limit Switch (LIMN)" and "Reference Switch (REF)" as well as the signals of the safety function STO (`STO_A` and `STO_B`) are effective during exclusive access.

0198441113956, V1.00, 07.2013

Parameter name	Description	Unit Minimum value Factory setting Maximum value	Data type R/W Persistent Expert	Parameter address via fieldbus
`AccessLock`	Locking other access channels Value 0: Allow control via other access channels Value 1: Lock control via other access channels Example: The access channel is used by the fieldbus. In this case, control via the commissioning software or the HMI is not possible. The access channel can only be locked after the current operating mode has terminated. Changed settings become active immediately.	- 0 0 1	UINT16 UINT16 R/W - -	CANopen 3001:E_h Modbus 284

0198441113956, V1.00, 07.2013

8.2 Operating states

8.2.1 State diagram

After switching on and when an operating mode is started, the product goes through a number of operating states.

The state diagram (state machine) shows the relationships between the operating states and the state transitions.

The operating states are internally monitored and influenced by monitoring functions.

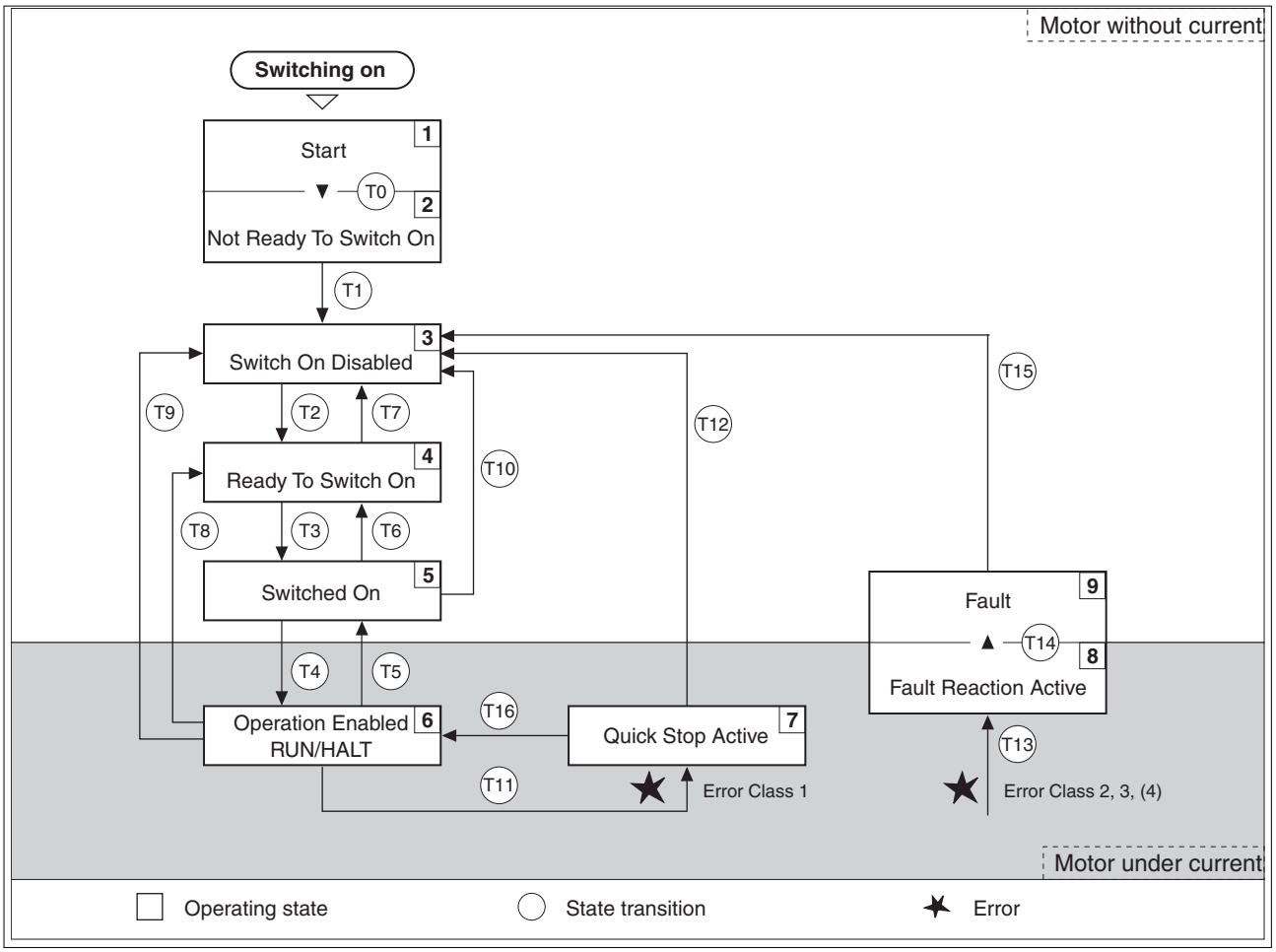

Figure 54: State diagram

Operating states

Operating state	Description
1 Start	Electronics are initialized
2 Not Ready To Switch On	The power stage is not ready to switch on
3 Switch On Disabled	Impossible to enable the power stage
4 Ready To Switch On	The power stage is ready to switch on.
5 Switched On	Power stage is switched on
6 Operation Enabled	Power stage is enabled Selected operating mode is active
7 Quick Stop Active	"Quick Stop" is being executed
8 Fault Reaction Active	Error response is active
9 Fault	Error response terminated Power stage is disabled

Error class

The product triggers an error response if an error occurs. Depending upon the severity of the error, the device responds in accordance with one of the following error classes:

Error class	Response	Meaning
0	Warning	A monitoring function has detected a problem. No interruption of the movement.
1	"Quick Stop"	Motor stops with "Quick Stop", the power stage remains enabled.
2	"Quick Stop" with switch-off	Motor stops with "Quick Stop", the power stage is disabled after standstill has been achieved.
3	Fatal error	The power stage is immediately disabled without stopping the motor first.
4	Uncontrolled operation	The power stage is immediately disabled without stopping the motor first. The error can only be reset by switching off the product.

Error response

The state transition T13 (error class 2, 3 or 4) initiates an error response as soon as an internal occurrence signals an error to which the device must react.

Error class	Response
2	Movement is stopped with "Quick Stop" Holding brake is applied Power stage is disabled
3, 4 or Safety function STO	Power stage is immediately disabled

An error can be triggered by a temperature sensor, for example. The product cancels the current movement and triggers an error response. Subsequently, the operating state changes to **9** Fault.

Resetting an error message

A "Fault Reset" resets an error message.

*In the event of a "Quick Stop" triggered by a detected error of class 1 (operating state **7** Quick Stop Active), a "Fault Reset" causes a direct transition to operating state **6** Operation Enabled.*

0198441113956, V1.00, 07.2013

8.2.2 State transitions

State transitions are triggered by an input signal, a fieldbus command or as a response to a monitoring function.

State transition	Operating state	Condition / event [1]	Response
T0	**1**-> **2**	• Device electronics successfully initialized	
T1	**2**-> **3**	• Parameter successfully initialized	
T2	**3** -> **4**	• No undervoltage Encoder successfully checked Actual velocity: <1000 min^{-1} STO signals = +24V Fieldbus command: Shutdown [2]	
T3	**4** -> **5**	• Request for enabling the power stage • Fieldbus command: Switch On or Enable Operation	
T4	**5** -> **6**	• Automatic transition • Fieldbus command: Enable Operation	Power stage is enabled. User-defined parameters are checked. Holding brake is released (if available).
T5	**6** -> **5**	• Fieldbus command: Disable Operation	Movement is canceled with "Halt". Holding brake is applied (if available). Power stage is disabled.
T6	**5** -> **4**	• Fieldbus command: Shutdown	
T7	**4** -> **3**	• Undervoltage • STO signals = 0V • Actual velocity: >1000 min^{-1} (for example by external driving force) • Fieldbus command: Disable Voltage	-
T8	**6** -> **4**	• Fieldbus command: Shutdown	Power stage is immediately disabled.
T9	**6** -> **3**	• Request for disabling the power stage • Fieldbus command: Disable Voltage	Power stage is immediately disabled.
T10	**5** -> **3**	• Request for disabling the power stage • Fieldbus command: Disable Voltage	
T11	**6** -> **7**	• Error of error class 1 • Fieldbus command: Quick Stop	Movement is canceled with "Quick Stop".
T12	**7** -> **3**	• Request for disabling the power stage • Fieldbus command: Disable Voltage	Power stage is disabled immediately, even if "Quick Stop" is still active.
T13	**x** -> **8**	• Error of error classes 2, 3 or 4	Error response is carried out, see "Error Response".
T14	**8** -> **9**	• Error response terminated (error class 2) • Error of error classes 3 or 4	
T15	**9** -> **3**	• Function: "Fault Reset"	Error is reset (cause of error must have been corrected).
T16	**7** -> **6**	• Function: "Fault Reset" • Fieldbus command: Enable Operation [3]	

1) In order to trigger a state transition it is sufficient if one condition is met
2) Only required with parameter `DS402compatib` = 1
3) Possible only if operating state was triggered via the fieldbus

0198441113956, V1.00, 07.2013

8.2.3 Indication of the operating state

8.2.3.1 Signal outputs

Information on the operating state is available via the the signal outputs. The table below provides an overview.

Operating state	"No fault" 1)	"Active" 2)
1 Start	0	0
2 Not Ready To Switch On	0	0
3 Switch On Disabled	0	0
4 Ready To Switch On	1	0
5 Switched On	1	0
6 Operation Enabled	1	1
7 Quick Stop Active	0	0
8 Fault Reaction Active	0	0
9 Fault	0	0

1) The signal output function is factory setting for `DQ0`
2) The signal output function is the factory setting for `DQ1`

8.2.3.2 Fieldbus

The parameter `DCOMstatus` provides information on the operating state of the device and the processing status of the operating mode.

Parameter name	Description	Unit Minimum value Factory setting Maximum value	Data type R/W Persistent Expert	Parameter address via fieldbus
`_DCOMstatus`	DriveCom status word Bit assignments: Bits 0 ... 3: Status bits Bit 4: Voltage enabled Bits 5 ... 6: Status bits Bit 7: Warning Bit 8: HALT request active Bit 9: Remote Bit 10: Target reached Bit 11: Assignment can be set via parameter DS402intLim Bit 12: Operating mode-specific Bit 13: x_err Bit 14: x_end Bit 15: ref_ok	- - - -	UINT16 UINT16 R/- - -	CANopen 6041:0_h Modbus 6916

0198441113956, V1.00, 07.2013

Bits 0, 1, 2, 3, 5 and 6 Bits 0, 1, 2, 3, 5 and 6 of the `DCOMstatus` parameter provide information on the operating state.

Operating state	Bit 6 Switch On Disabled	Bit 5 Quick Stop	Bit 3 Fault	Bit 2 Operation Enabled	Bit 1 Switched On	Bit 0 Ready To Switch On
2 Not Ready To Switch On	0	X	0	0	0	0
3 Switch On Disabled	1	X	0	0	0	0
4 Ready To Switch On	0	1	0	0	0	1
5 Switched On	0	1	0	0	1	1
6 Operation Enabled	0	1	0	1	1	1
7 Quick Stop Active	0	0	0	1	1	1
8 Fault Reaction Active	0	X	1	1	1	1
9 Fault	0	X	1	0	0	0

Bit 4 Bit 4=1 indicates whether the DC bus voltage is correct. If the voltage is missing or is too low, the device does not transition from operating state 3 to operating state 4.

Bit 7 Bit 7 is 1 if parameter `_WarnActive` contains a warning message. The movement is not interrupted. The bit remains set as long as a warning message is contained in parameter `_WarnActive`. The bit remains set for at least 100ms, even if a warning message is active for a shorter time. The bit is reset immediately in the case of a "Fault Reset".

Bit 8 Bit 8=1 indicates that a "Halt" is active.

Bit 9 If bit 9 is set, the device carries out commands via the fieldbus. If Bit 9 is reset, the device is controlled via a different interface. In such a case, it is still possible to read or write parameters via the fieldbus.

Bit 10 Bit 10 is used for monitoring the current operating mode. Details can be found in the chapters on the individual operating modes.

Bit 11 The meaning of bit 11 can be set via the parameter `DS402intLim`.

Bit 12 Bit 12 is used for monitoring the current operating mode. Details can be found in the chapters on the individual operating modes.

Bit 13 Bit 13 only becomes "1" in the case of an error which needs to be remedied prior to further processing. The device responds corresponding to an error class.

Bit 14 Bit 14 changes to "0" if an operating mode is started. When processing is terminated or interrupted, for example by a "Halt", bit 14 toggles back to "1" once the motor has come to a standstill. The signal change of bit 14 to "1" is suppressed if one process is followed immediately by a new process in a different operating mode.

Bit 15 Bit 15 is "1" if the motor has a valid zero point, for example as a result of a reference movement. A valid zero point remains valid even if the power stage is disabled.

0198441113956, V1.00, 07.2013

8.2.4 Changing the operating state

8.2.4.1 Signal inputs

It is possible to switch between operating states via the signal inputs.

Signal input function "Enable"

The power stage is enabled by means of the signal input function "Enable".

"Enable"	State transition
Rising edge	Enabling the power stage T3
Falling edge	Disabling the power stage T9 and T12

In order to activate the power stage via the signal input, you must first parameterizes the signal input function "Enable", see chapter "8.5.2 Setting the digital signal inputs and signal outputs".

With the parameter `IO_FaultResOnEnaInp`, it is possible to also reset an error message with a rising or a falling edge at the signal input.

Parameter name	Description	Unit Minimum value Factory setting Maximum value	Data type R/W Persistent Expert	Parameter address via field-bus
`IO_FaultResOnEnaInp`	Additional 'Fault Reset' for the signal input function 'Enable' **0 / Off**: No additional 'Fault Reset' **1 / OnFallingEdge**: Additional 'Fault Reset' during falling edge **2 / OnRisingEdge**: Additional 'Fault Reset' during rising edge Changed settings become active the next time the power stage is enabled.	- 0 0 2	UINT16 UINT16 R/W per. -	CANopen 3005:34$_h$ Modbus 1384

Signal input function "Fault Reset"

The signal input function"Fault Reset" is used to reset an error message.

"Fault Reset"	State transition
Rising edge	Resetting an error message T15 and T16

In order to reset an error message via via the signal input, you must first parameterize the signal input function "Fault Reset", see chapter "8.5.2 Setting the digital signal inputs and signal outputs".

0198441113956, V1.00, 07.2013

Signal input functions "Jog Positive With Enable"

The signal input function "Jog Positive With Enable" enables the power stage, starts the operating mode Jog and triggers a movement in positive direction.

"Jog Positive With Enable"	State transition
Rising edge	Enabling the power stage T3 Automatic change to the operating mode Jog and start of a movement in positive direction. See chapter "8.3.2 Operating mode Jog" for details and parameterization.
Falling edge	Stopping the movement. Disabling the power stage T9 and T12

Signal input functions "Jog Negative With Enable"

The signal input function "Jog Negative With Enable" enables the power stage, starts the operating mode Jog and triggers a movement in negative direction.

"Jog Negative With Enable"	State transition
Rising edge	Enabling the power stage T3 Automatic change to the operating mode Jog and start of a movement in negative direction. See chapter "8.3.2 Operating mode Jog" for details and parameterization.
Falling edge	Stopping the movement. Disabling the power stage T9 and T12

0198441113956, V1.00, 07.2013

8.2.4.2 Fieldbus

It is possible to switch between operating states via the parameter `DCOMcontrol`.

Parameter name	Description	Unit Minimum value Factory setting Maximum value	Data type R/W Persistent Expert	Parameter address via fieldbus
`DCOMcontrol`	DriveCom control word Refer to chapter Operation, Operating States, for bit coding information. Bit 0: Switch on Bit 1: Enable Voltage Bit 2: Quick Stop Bit 3: Enable Operation Bits 4 ... 6: Operating mode specific Bit 7: Fault Reset Bit 8: Halt Bit 9: Change on setpoint Bits 10 ... 15: Reserved (must be 0) Changed settings become active immediately.	- - - -	UINT16 UINT16 R/W - -	CANopen 6040:0_h Modbus 6914

Bits 0, 1, 2, 3 and 7 Bits 0, 1, 2, 3 and 7 of the parameter `DCOMcontrol` allow you to switch between the operating states.

Fieldbus command	State transitions	State transition to	Bit 7 Fault Reset	Bit 3 Enable Operation	Bit 2 Quick Stop	Bit 1 Enable Voltage	Bit 0 Switch On
Shutdown	T2, T6, T8	**4** Ready To Switch On	0	X	1	1	0
Switch On	T3	**5** Switched On	0	0	1	1	1
Disable Voltage	T7, T9, T10, T12	**3** Switch On Disabled	0	X	X	0	X
Quick Stop	T7, T10 T11	**3** Switch On Disabled **7** Quick Stop Active	0	X	0	1	X
Disable Operation	T5	**5** Switched On	0	0	1	1	1
Enable Operation	T4, T16	**6** Operation Enabled	0	1	1	1	1
Fault Reset	T15	**3** Switch On Disabled	0->1	X	X	X	X

Bits 4 ... 6 Bits 4 to 6 are used for the operating mode-specific settings. Details can be found in the descriptions of the individual operating modes in this chapter.

Bit 8 A "Halt" can be triggered with bit 8=1.

Bit 9 Bit 9 is used for operating mode-specific settings. Details can be found in the descriptions of the individual operating modes in this chapter.

Bits 10 ... 15 Reserved.

0198441113956, V1.00, 07.2013

8.3 Operating modes

8.3.1 Starting and changing an operating mode

The parameter `DCOMopmode` is used to set the desired operating mode.

Parameter name	Description	Unit Minimum value Factory setting Maximum value	Data type R/W Persistent Expert	Parameter address via field-bus
`DCOMopmode`	Operating mode **-6 / Manual Tuning / Autotuning**: Manual Tuning or Autotuning **-1 / Jog**: Jog **0 / Reserved**: Reserved **1 / Profile Position**: Profile Position **3 / Profile Velocity**: Profile Velocity **4 / Profile Torque**: Profile Torque **6 / Homing**: Homing **7 / Interpolated Position**: Interpolated Position **8 / Cyclic Synchronous Position**: Cyclic Synchronous Position **9 / Cyclic Synchronous Velocity**: Cyclic Synchronous Velocity **10 / Cyclic Synchronous Torque**: Cyclic Synchronous Torque Changed settings become active immediately.	- -6 - 10	INT8 INT16 R/W - -	CANopen 6060:0_h Modbus 6918

- Set the operating mode with the parameter `DCOMopmode`.

The parameter `_DCOMopmode_act` can be used to read the current operating mode.

Parameter name	Description	Unit Minimum value Factory setting Maximum value	Data type R/W Persistent Expert	Parameter address via field-bus
`_DCOMopmd_act`	Active operating mode **-6 / Manual Tuning / Autotuning**: Manual Tuning / Autotuning **-1 / Jog**: Jog **0 / Reserved**: Reserved **1 / Profile Position**: Profile Position **3 / Profile Velocity**: Profile Velocity **4 / Profile Torque**: Profile Torque **6 / Homing**: Homing **7 / Interpolated Position**: Interpolated Position **8 / Cyclic Synchronous Position**: Cyclic Synchronous Position **9 / Cyclic Synchronous Velocity**: Cyclic Synchronous Velocity **10 / Cyclic Synchronous Torque**: Cyclic Synchronous Torque	- -6 - 10	INT8 INT16 R/- - -	CANopen 6061:0_h Modbus 6920

The operating mode can be changed after the current operating mode has been terminated.

0198441113956, V1.00, 07.2013

In addition, it is also possible to change the operating mode during a running movement; however, this is only possible in certain operating modes.

Changing the operating mode during a movement

You can switch between the following operating modes during a running movement.

- Jog
- Profile Torque
- Profile Velocity
- Profile Position

The operating mode can be changed while the motor is at a standstill or while the motor is not at a standstill, depending on the new operating mode.

Operating mode to be changed to	Motor standstill
Jog	With motor standstill
Profile Torque	Without motor standstill
Profile Velocity	Without motor standstill
Profile Position	Drive profile DS402: With motor standstill [1)] Drive profile Drive Profile Lexium: Adjustable via parameter `PP_OpmChgType`

1) Parameter `PP_OpmChgType` must be set to the value 0.

The motor is decelerated to a standstill via the ramp set in the parameter `LIM_HaltReaction`, see chapter "8.6.1 Stop movement with Halt".

Parameter name	Description	Unit Minimum value Factory setting Maximum value	Data type R/W Persistent Expert	Parameter address via fieldbus
`PP_OpmChgType`	Change to operating mode Profile Position during movements **0 / WithStandStill**: Change with standstill **1 / OnTheFly**: Change without standstill Setting can only be changed if power stage is disabled. Changed settings become active the next time the power stage is enabled.	- 0 0 1	UINT16 UINT16 R/W per. -	CANopen 3023:9h Modbus 8978

0198441113956, V1.00, 07.2013

8.3.2 Operating mode Jog

Description

In the operating mode Jog, a movement is made from the actual motor position in the desired direction.

A movement can be made using one of 2 methods:

- Continuous movement
- Step movement

In addition, the product features 2 parameterizable velocities.

Starting the operating mode

The operating mode can be started via the fieldbus or via the signal inputs.

If the operating mode is started via the fieldbus, the operating mode must have been set in the parameter `DCOMopmode`. Writing the parameter value activates the operating mode. The parameter `JOGactivate` starts the movement.

Parameter name	Description	Unit Minimum value Factory setting Maximum value	Data type R/W Persistent Expert	Parameter address via field-bus
`JOGactivate`	Activation of operating mode Jog Bit 0: Positive direction of movement Bit 1: Negative direction of movement Bit 2: 0=slow 1=fast Changed settings become active immediately.	- 0 0 7	UINT16 UINT16 R/W - -	CANopen 301B:9h Modbus 6930

If the operating mode is started via the signal inputs, the signal input functions "Jog Positive With Enable" and "Jog Negative With Enable" must have been parameterized, see chapter "8.5.2 Setting the digital signal inputs and signal outputs".

Signal input function	Meaning
"Jog Positive With Enable"	The signal input function "Jog Positive With Enable" enables the power stage, starts the operating mode Jog and triggers a movement in positive direction.
"Jog Negative With Enable"	The signal input function "Jog Negative With Enable" enables the power stage, starts the operating mode Jog and triggers a movement in negative direction.

Control word

Bit 8 in parameter `DCOMcontrol` is used to stop a movement with "Halt".

Parameter value	Meaning
Bit 4: Reserved	Not relevant for this operating mode
Bit 5: Reserved	Not relevant for this operating mode
Bit 6: Reserved	Not relevant for this operating mode
Bit 8: Halt	Stop movement with "Halt"
Bit 9: Reserved	Not relevant for this operating mode

0198441113956, V1.00, 07.2013

Status word

Information on the current movement is available via bits 10 and 12 ... 15 in the parameter `DCOMstatus`.

Parameter value	Meaning
Bit 10: Reserved	Not relevant for this operating mode
Bit 12: Reserved	Not relevant for this operating mode
Bit 13: x_err	1: Error detected
Bit 14: x_end	0: Operating mode started 1: Operating mode terminated
Bit 15: ref_ok	1: Zero point is valid

Terminating the operating mode

The operating mode is terminated when the motor is at a standstill and one of the following conditions is met:

- Value of the parameter `JOGactivate` is 0
- Stop caused by "Halt" or "Quick Stop"
- Stop caused by a detected error

0198441113956, V1.00, 07.2013

8.3.2.1 Continuous movement

As long as the signal for the direction is available, a continuous movement is made in the desired direction.

Continuous movement via the fieldbus

The illustration below provides an overview of continuous movement via the fieldbus.

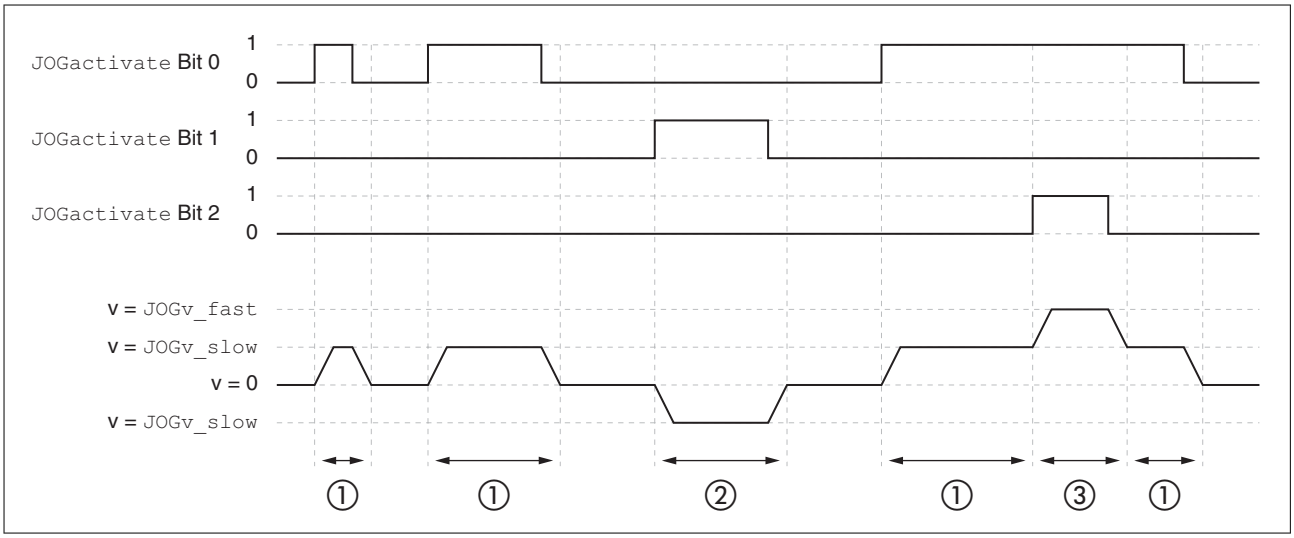

Figure 55: Continuous movement via the fieldbus

(1) Slow movement in positive direction
(2) Slow movement in negative direction
(3) Fast movement in positive direction

Continuous movement via signal inputs

The illustration below provides an overview of continuous movement via the signal inputs.

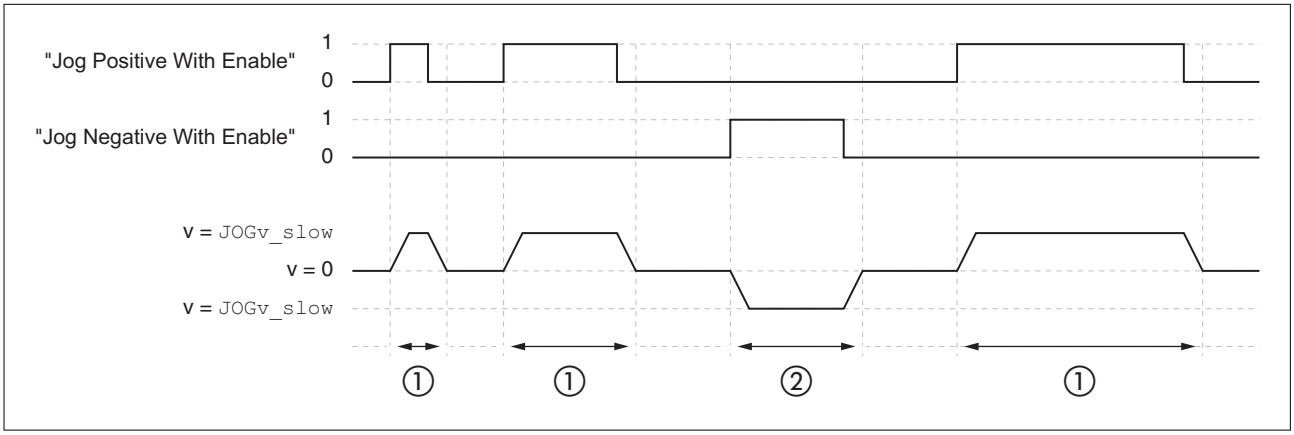

Figure 56: Continuous movement via signal inputs

(1) Slow movement in positive direction
(2) Slow movement in negative direction

The signal input functions "Jog Positive With Enable" and "Jog Negative With Enable" must have been parameterized, see chapter "8.5.2 Setting the digital signal inputs and signal outputs".

0198441113956, V1.00, 07.2013

8.3.2.2 Step movement

If the signal for the direction is available, a movement with a parameterizable number of user-defined units is made in the desired direction. After this movement, the motor stops for a defined period of time. Then a continuous movement is made in the desired direction.

Step movement via the fieldbus

The illustration provides shows an overview of step movement via the fieldbus.

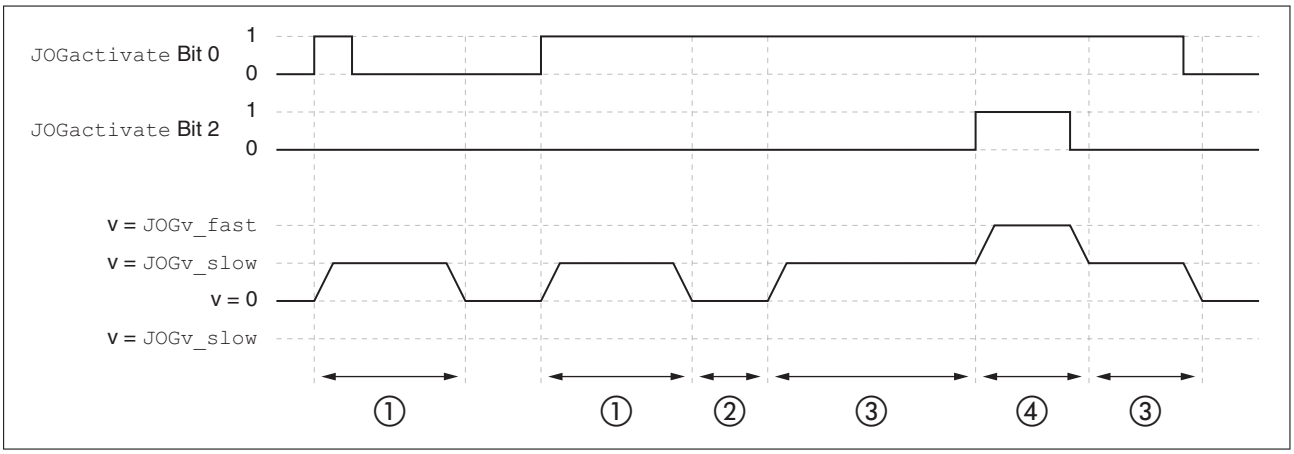

Figure 57: Step movement via the fieldbus

(1) Slow movement in positive direction with a parameterizable number of user-defined units `JOGstep`

(2) Waiting time `JOGtime`

(3) Slow continuous movement in positive direction

(4) Fast continuous movement in positive direction

Step movement via signal inputs

The illustration below provides an overview of step movement via the signal inputs.

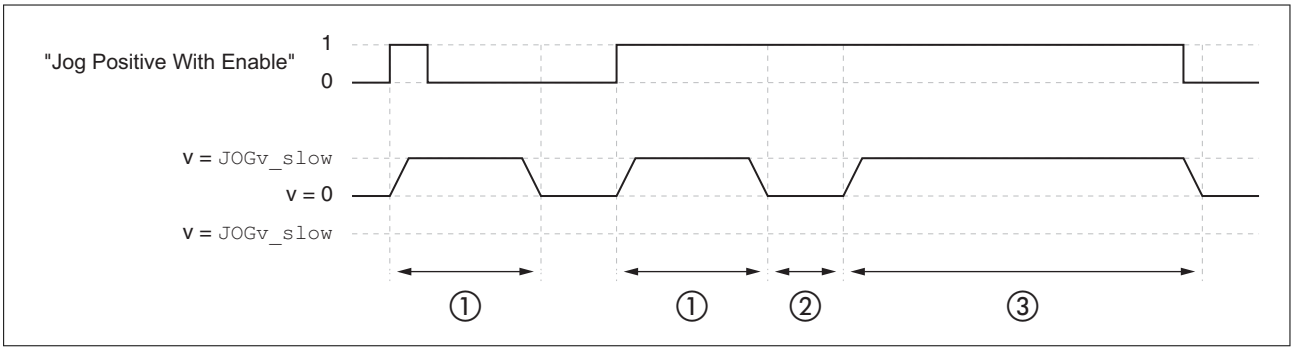

Figure 58: Step movement via signal inputs

(1) Slow movement in positive direction with a parameterizable number of user-defined units `JOGstep`

(2) Waiting time `JOGtime`

(3) Slow continuous movement in positive direction

0198441113956, V1.00, 07.2013

8.3.2.3 Parameterization

Overview The illustration below provides an overview of the parameters that can be adjusted in fieldbus control mode.

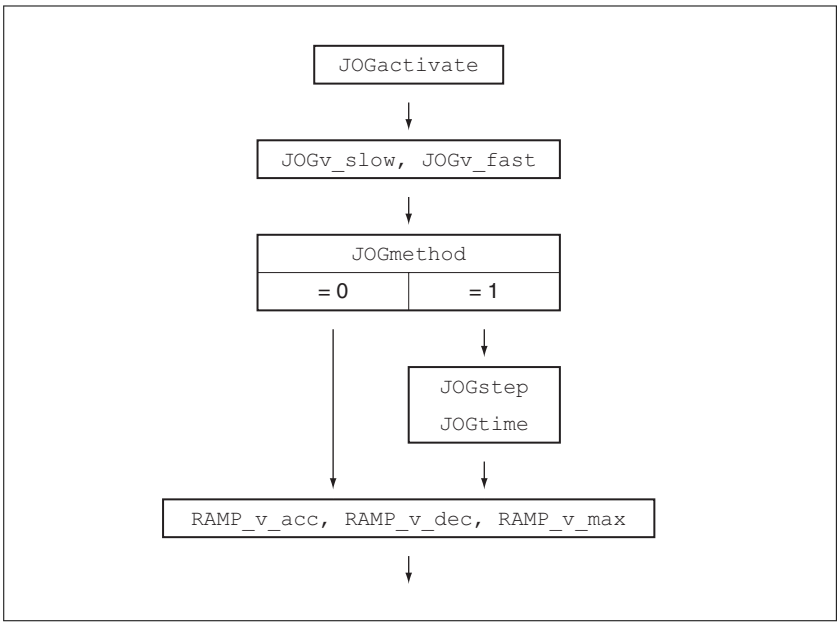

Figure 59: Overview of adjustable parameters via the fieldbus

The illustration below provides an overview of the adjustable parameters for movements via the signal inputs:

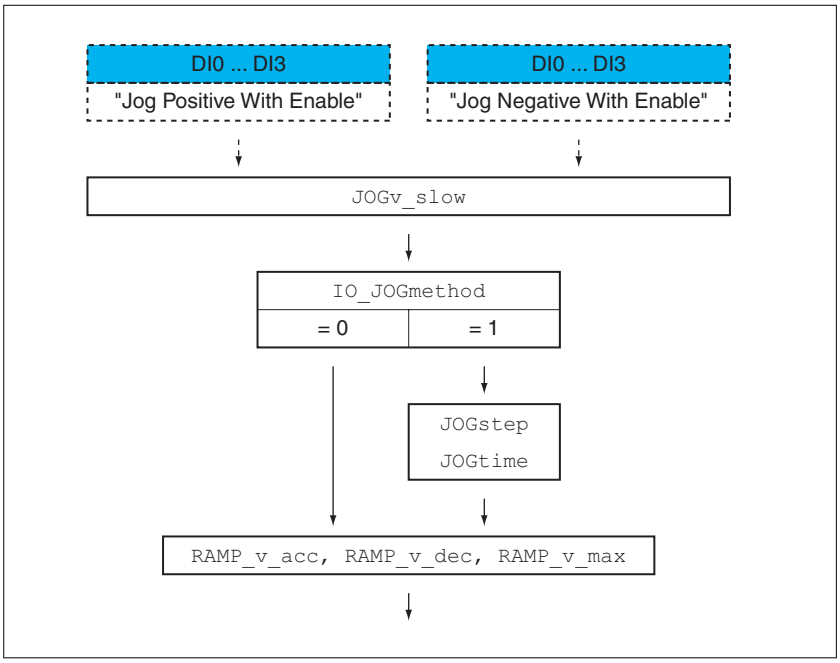

Figure 60: Overview of adjustable parameters via the signal inputs

0198441113956, V1.00, 07.2013

Velocities

Two parameterizable velocities are available.

- Set the desired values with the parameters `JOGv_slow` and `JOGv_fast`.

Parameter name	Description	Unit Minimum value Factory setting Maximum value	Data type R/W Persistent Expert	Parameter address via fieldbus
`JOGv_slow`	Velocity for slow movement The adjustable value is internally limited to the current parameter setting in RAMP_v_max. Changed settings become active immediately.	usr_v 1 60 2147483647	UINT32 UINT32 R/W per. -	CANopen 3029:4h Modbus 10504
`JOGv_fast`	Velocity for fast movement The adjustable value is internally limited to the current parameter setting in RAMP_v_max. Changed settings become active immediately.	usr_v 1 180 2147483647	UINT32 UINT32 R/W per. -	CANopen 3029:5h Modbus 10506

Selection of the method

The parameter `JOGmethod` is used to set the method for movements via the fieldbus.

- Set the desired method with the parameter `JOGmethod`.

The parameter `IO_JOGmethod` is used to set the method for movements via the signal inputs.

- Set the desired method with the parameter `IO_JOGmethod`.

Parameter name	Description	Unit Minimum value Factory setting Maximum value	Data type R/W Persistent Expert	Parameter address via fieldbus
`JOGmethod`	Selection of jog method **0 / Continuous Movement**: Jog with continuous movement **1 / Step Movement**: Jog with step movement Changed settings become active immediately.	- 0 1 1	UINT16 UINT16 R/W - -	CANopen 3029:3h Modbus 10502
`IO_JOGmethod`	Selection of jog method **0 / Continuous Movement**: Jog with continuous movement **1 / Step Movement**: Jog with step movement Changed settings become active the next time the motor moves.	- 0 1 1	UINT16 UINT16 R/W per. -	CANopen 3005:18h Modbus 1328

Setting the step movement

The parameters `JOGstep` and `JOGtime` are used to set the parameterizable number of user-defined units and the time for which the motor is stopped.

- Set the desired values with the parameters `JOGstep` and `JOGtime`.

0198441113956, V1.00, 07.2013

Parameter name	Description	Unit Minimum value Factory setting Maximum value	Data type R/W Persistent Expert	Parameter address via field-bus
JOGstep	Distance for step movement Changed settings become active the next time the motor moves.	usr_p 1 20 2147483647	INT32 INT32 R/W per. -	CANopen 3029:7h Modbus 10510
JOGtime	Wait time for step movement Changed settings become active the next time the motor moves.	ms 1 500 32767	UINT16 UINT16 R/W per. -	CANopen 3029:8h Modbus 10512

Changing the motion profile for the velocity

It is possible to change the parameterization of the motion profile for the velocity, see chapter "8.5.4 Setting the motion profile for the velocity".

8.3.2.4 Additional settings

The following functions can be used for target value processing:

- Chapter "8.6.1 Stop movement with Halt"
- Chapter "8.6.2 Stopping a movement with Quick Stop"
- Chapter "8.6.3 Limitation of the velocity via signal inputs"
- Chapter "8.6.4 Limitation of the current via signal inputs"
- Chapter "8.6.5 Jerk limitation"
- Chapter "8.6.7 Setting a signal output via parameter"
- Chapter "8.6.9 Position capture via signal input"
- Chapter "8.6.10 Relative Movement After Capture (RMAC)"

The following functions can be used for monitoring the movement:

- Chapter "8.7.1 Limit switches"
- Chapter "8.7.3 Software limit switches"
- Chapter "8.7.4 Load-dependent position deviation (following error)"
- Chapter "8.7.5 Motor standstill and direction of movement"
- Chapter "8.7.8 Standstill window"

  This function is only available for a step movement.
- Chapter "8.7.9 Position register"
- Chapter "8.7.10 Position deviation window"
- Chapter "8.7.11 Velocity deviation window"
- Chapter "8.7.12 Velocity threshold value"
- Chapter "8.7.13 Current threshold value"

0198441113956, V1.00, 07.2013

8.3.2.5 Example of a movement via DS402 objects

Adapting the list of the startup parameters

Index	Parameter name (DS402 name)	Value
3006:3D$_h$	CompParSyncMot	0
3006:38$_h$	MOD_Enable	0
3006:18$_h$	LIM_QStopReact	6
3006:6$_h$	IOsigRespOfPS	0
3006:7$_h$	ScalePOSdenom	16384
3006:8$_h$	ScalePOSnum	1
3012:6$_h$	CTRL1_KFPp	1000
3013:6$_h$	CTRL2_KFPp	1000
6060:0$_h$	DCOMopmode (Mode of operation)	-1
1C33:3$_h$	ECATinpshifttime	250000

Adapting the mapping for RxPDO

Index	Parameter name (DS402 name)
6040:0$_h$	DCOMcontrol (Control word)
301B:9$_h$	JOGactivate
6060:0$_h$	DCOMopmode (Mode of operation)

Adapting the mapping for TxPDO

Index	Parameter name (DS402 name)
6041:0$_h$	_DCOMstatus (Status word)
6060:0$_h$	_DCOMopmd_act (Mode of operation display)

Example

Meaning	Index	Parameter name (DS402 name)	Value
SDO: Set the velocity for slow movement (for example, 100 min^{-1})	3029:4$_h$	JOGv_slow	64$_h$
SDO: Set the velocity for fast movement (for example, 300 min^{-1})	3029:5$_h$	JOGv_fast	012C$_h$
RxPDO: Enable power stage	6040:0$_h$	DCOMcontrol (Control word)	00$_h$
	6040:0$_h$	DCOMcontrol (Control word)	06$_h$
	6040:0$_h$	DCOMcontrol (Control word)	0F$_h$
TxPDO: Check whether power stage has been enabled	6041:0$_h$	_DCOMstatus (Status word)	4637$_h$
RxPDO: Set the operating mode	6060:0$_h$	DCOMopmode (Mode of operation)	FF$_h$
TxPDO: Check whether operating mode has been set	6061:0$_h$	_DCOMopmd_act (Mode of operation display)	FF$_h$
RxPDO: Start movement (for example, slow movement in positive direction)	301B:9$_h$	JOGactivate	01$_h$
TxPDO: Get the state via status parameters	6041:0$_h$	_DCOMstatus (Status word)	0237$_h$
RxPDO: Terminate movement	301B:9$_h$	JOGactivate	00$_h$

0198441113956, V1.00, 07.2013

8.3.3 Operating mode Profile Torque

Description

In the operating mode Profile Torque, a movement is made with a desired target torque.

Without a proper limit value, the motor can reach a very high velocity in this operating mode.

⚠ WARNING

EXCESSIVELY HIGH VELOCITY DUE TO INCORRECT LIMIT VALUE

Verify that the parameterized velocity limitation is appropriate for the motor.

Failure to follow these instructions can result in death, serious injury or equipment damage.

Starting the operating mode

The operating mode must be set in the parameter `DCOMopmode`. Writing the parameter value activates the operating mode.

The parameter `PTtq_target` starts the movement.

Parameter name	Description	Unit Minimum value Factory setting Maximum value	Data type R/W Persistent Expert	Parameter address via field-bus
`PTtq_target`	Target torque for operating mode Profile Torque 100.0 % correspond to the continuous stall torque _M_M_0. In increments of 0.1 %. Changed settings become active immediately.	% -3000.0 0.0 3000.0	INT16 INT16 R/W - -	CANopen 6071:0h Modbus 6944

Control word

Bit 8 in parameter `DCOMcontrol` is used to stop a movement with "Halt".

Parameter value	Meaning
Bit 4: Reserved	Not relevant for this operating mode
Bit 5: Reserved	Not relevant for this operating mode
Bit 6: Reserved	Not relevant for this operating mode
Bit 8: Halt	Stop movement with "Halt"
Bit 9: Reserved	Not relevant for this operating mode

Status word

Information on the current movement is available via bits 10 and 12 ... 15 in the parameter `DCOMstatus`.

0198441113956, V1.00, 07.2013

Parameter value	Meaning
Bit 10: Target reached	0: Target torque not reached 1: Target torque reached
Bit 12: Reserved	Not relevant for this operating mode
Bit 13: x_err	1: Error detected
Bit 14: x_end	0: Operating mode started 1: Operating mode terminated
Bit 15: ref_ok	1: Zero point is valid

Terminating the operating mode

The operating mode is terminated when the motor is at a standstill and one of the following conditions is met:

- Stop caused by "Halt" or "Quick Stop"
- Stop caused by a detected error

0198441113956, V1.00, 07.2013

8.3.3.1 Parameterization

Overview

The illustration below provides an overview of the adjustable parameters.

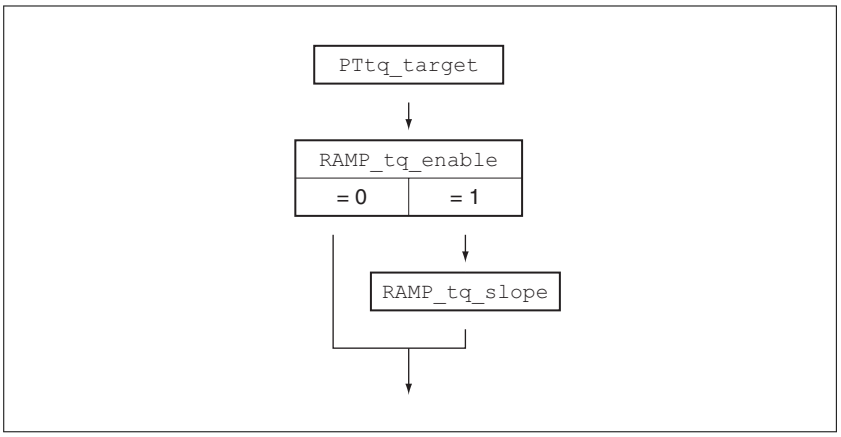

Figure 61: Overview of adjustable parameters

Setting the target torque

The target torque is set by means of the parameter `PTtq_target`.

- Set the desired target torque with the parameter `PTtq_target`.

Parameter name	Description	Unit Minimum value Factory setting Maximum value	Data type R/W Persistent Expert	Parameter address via fieldbus
`PTtq_target`	Target torque for operating mode Profile Torque 100.0 % correspond to the continuous stall torque _M_M_0. In increments of 0.1 %. Changed settings become active immediately.	% -3000.0 0.0 3000.0	INT16 INT16 R/W - -	CANopen 6071:0_h Modbus 6944

Changing the motion profile for the torque

It is possible to change the parameterization of the motion profile for the torque.

0198441113956, V1.00, 07.2013

Parameter name	Description	Unit Minimum value Factory setting Maximum value	Data type R/W Persistent Expert	Parameter address via field-bus
RAMP_tq_enable	Activation of the motion profile for torque **0 / Profile Off**: Profile off **1 / Profile On**: Profile on In the operating mode Profile Torque, the motion profile for torque can be activated or deactivated. In the other operating modes, the motion profile for torque is inactive. Setting can only be changed if power stage is disabled. Changed settings become active immediately.	- 0 1 1	UINT16 UINT16 R/W per. -	CANopen 3006:2C$_h$ Modbus 1624
RAMP_tq_slope	Slope setting of the motion profile for torque 100.00 % of the torque setting correspond to the continuous stall torque _M_M_0. Example: A ramp setting of 10000.00 %/s results in a torque change of 100.0% of _M_M_0 in 0.01s. In increments of 0.1 %/s. Changed settings become active immediately.	%/s 0.1 10000.0 3000000.0	UINT32 UINT32 R/W per. -	CANopen 6087:0$_h$ Modbus 1620

8.3.3.2 Additional settings

The following functions can be used for target value processing:

- Chapter "8.6.1 Stop movement with Halt"
- Chapter "8.6.2 Stopping a movement with Quick Stop"
- Chapter "8.6.3 Limitation of the velocity via signal inputs"
- Chapter "8.6.4 Limitation of the current via signal inputs"
- Chapter "8.6.7 Setting a signal output via parameter"
- Chapter "8.6.9 Position capture via signal input"
- Chapter "8.6.10 Relative Movement After Capture (RMAC)"

The following functions can be used for monitoring the movement:

- Chapter "8.7.1 Limit switches"
- Chapter "8.7.3 Software limit switches"
- Chapter "8.7.5 Motor standstill and direction of movement"
- Chapter "8.7.6 Torque window"
- Chapter "8.7.9 Position register"
- Chapter "8.7.12 Velocity threshold value"
- Chapter "8.7.13 Current threshold value"

0198441113956, V1.00, 07.2013

8.3.3.3 Example of a movement via DS402 objects

Adapting the list of the startup parameters

Index	Parameter name (DS402 name)	Value
3006:3D$_h$	`CompParSyncMot`	0
3006:38$_h$	`MOD_Enable`	0
3006:18$_h$	`LIM_QStopReact`	6
3006:6$_h$	`IOsigRespOfPS`	0
3006:7$_h$	`ScalePOSdenom`	16384
3006:8$_h$	`ScalePOSnum`	1
3012:6$_h$	`CTRL1_KFPp`	1000
3013:6$_h$	`CTRL2_KFPp`	1000
6060:0$_h$	`DCOMopmode` (Mode of operation)	4
1C33:3$_h$	`ECATinpshifttime`	250000

Adapting the mapping for RxPDO

Index	Parameter name (DS402 name)
6040:0$_h$	`DCOMcontrol` (Control word)
6071:0$_h$	`PTtq_target` (Target torque)
6060:0$_h$	`DCOMopmode` (Mode of operation)

Adapting the mapping for TxPDO

Index	Parameter name (DS402 name)
6041:0$_h$	`_DCOMstatus` (Status word)
6060:0$_h$	`_DCOMopmd_act` (Mode of operation display)

Example

Meaning	Index	Parameter name (DS402 name)	Value
SDO: Slope setting of the motion profile for torque (example 10.0 %/s)	3029:4$_h$	`RAMP_tq_slope` (Torque slope)	64$_h$
RxPDO: Enable power stage	6040:0$_h$	`DCOMcontrol` (Control word)	00$_h$
	6040:0$_h$	`DCOMcontrol` (Control word)	06$_h$
	6040:0$_h$	`DCOMcontrol` (Control word)	0F$_h$
TxPDO: Check whether power stage has been enabled	6041:0$_h$	`_DCOMstatus` (Status word)	4637$_h$
RxPDO: Set the operating mode	6060:0$_h$	`DCOMopmode` (Mode of operation)	04$_h$
TxPDO: Check whether operating mode has been set	6061:0$_h$	`_DCOMopmd_act` (Mode of operation display)	04$_h$
RxPDO: Start movement by transmitting a target torque (example 1.0 %)	60FF:0$_h$	`PTtq_target` (Target torque)	0A$_h$
TxPDO: Check whether target torque has been reached	6041:0$_h$	`_DCOMstatus` (Status word)	0637$_h$
RxPDO: Terminate movement (with Quick Stop)	6040:0$_h$	`DCOMcontrol` (Control word)	0B$_h$
RxPDO: Reset Quick Stop	6040:0$_h$	`DCOMcontrol` (Control word)	0F$_h$

0198441113956, V1.00, 07.2013

8.3.4 Operating mode Profile Velocity

Description

In the operating mode Profile Velocity, a movement is made with a desired target velocity.

Starting the operating mode

The operating mode must be set in the parameter `DCOMopmode`. Writing the parameter value activates the operating mode.

The parameter `PVv_target` starts the movement.

Parameter name	Description	Unit Minimum value Factory setting Maximum value	Data type R/W Persistent Expert	Parameter address via field-bus
`PVv_target`	Target velocity for operating mode Profile Velocity The target velocity is limited to the setting in CTRL_v_max and RAMP_v_max. Changed settings become active immediately.	usr_v - 0 -	INT32 INT32 R/W - -	CANopen 60FF:0_h Modbus 6938

Control word

Bit 8 in parameter `DCOMcontrol` is used to stop a movement with "Halt".

Parameter value	Meaning
Bit 4: Reserved	Not relevant for this operating mode
Bit 5: Reserved	Not relevant for this operating mode
Bit 6: Reserved	Not relevant for this operating mode
Bit 8: Halt	Stop movement with "Halt"
Bit 9: Reserved	Not relevant for this operating mode

Status word

Information on the current movement is available via bits 10 and 12 ... 15 in the parameter `DCOMstatus`.

Parameter value	Meaning
Bit 10: Target reached	0: Target velocity not reached 1: Target velocity reached
Bit 12: Velocity	0: Velocity = >0 1: Velocity = 0
Bit 13: x_err	1: Error detected
Bit 14: x_end	0: Operating mode started 1: Operating mode terminated
Bit 15: ref_ok	1: Zero point is valid

Terminating the operating mode

The operating mode is terminated when the motor is at a standstill and one of the following conditions is met:

- Stop caused by "Halt" or "Quick Stop"
- Stop caused by a detected error

0198441113956, V1.00, 07.2013

8.3.4.1 Parameterization

Overview

The illustration below provides an overview of the adjustable parameters.

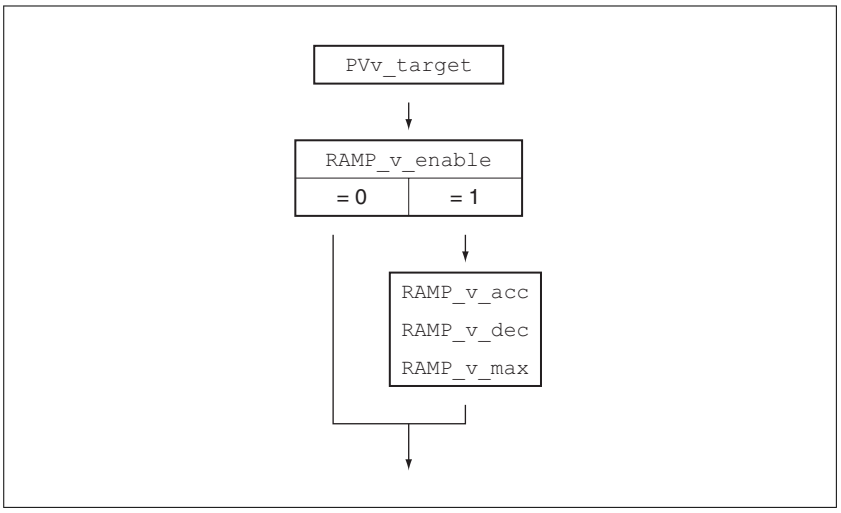

Figure 62: Overview of adjustable parameters

Setting the target velocity

The parameter `PVv_target` allows you to set the target velocity.

- Set the target velocity with the parameter `PVv_target`.

Parameter name	Description	Unit Minimum value Factory setting Maximum value	Data type R/W Persistent Expert	Parameter address via fieldbus
`PVv_target`	Target velocity for operating mode Profile Velocity The target velocity is limited to the setting in CTRL_v_max and RAMP_v_max. Changed settings become active immediately.	usr_v - 0 -	INT32 INT32 R/W - -	CANopen 60FF:0_h Modbus 6938

Changing the motion profile for the velocity

It is possible to change the parameterization of the motion profile for the velocity, see chapter
"8.5.4 Setting the motion profile for the velocity".

0198441113956, V1.00, 07.2013

8.3.4.2 Additional settings

The following functions can be used for target value processing:

- Chapter "8.6.1 Stop movement with Halt"
- Chapter "8.6.2 Stopping a movement with Quick Stop"
- Chapter "8.7.5 Motor standstill and direction of movement"
- Chapter "8.6.3 Limitation of the velocity via signal inputs"
- Chapter "8.6.4 Limitation of the current via signal inputs"
- Chapter "8.6.6 Zero Clamp"
- Chapter "8.6.7 Setting a signal output via parameter"
- Chapter "8.6.9 Position capture via signal input"
- Chapter "8.6.10 Relative Movement After Capture (RMAC)"

The following functions can be used for monitoring the movement:

- Chapter "8.7.1 Limit switches"
- Chapter "8.7.3 Software limit switches"
- Chapter "8.7.7 Velocity window"
- Chapter "8.7.9 Position register"
- Chapter "8.7.11 Velocity deviation window"
- Chapter "8.7.12 Velocity threshold value"
- Chapter "8.7.13 Current threshold value"

0198441113956, V1.00, 07.2013

8.3.4.3 Example of a movement via DS402 objects

Adapting the list of the startup parameters

Index	Parameter name (DS402 name)	Value
3006:3D$_h$	`CompParSyncMot`	0
3006:38$_h$	`MOD_Enable`	0
3006:18$_h$	`LIM_QStopReact`	6
3006:6$_h$	`IOsigRespOfPS`	0
3006:7$_h$	`ScalePOSdenom`	16384
3006:8$_h$	`ScalePOSnum`	1
3012:6$_h$	`CTRL1_KFPp`	1000
3013:6$_h$	`CTRL2_KFPp`	1000
6060:0$_h$	`DCOMopmode` (Mode of operation)	3
1C33:3$_h$	`ECATinpshifttime`	250000

Adapting the mapping for RxPDO

Index	Parameter name (DS402 name)
6040:0$_h$	`DCOMcontrol` (Control word)
60FF:0$_h$	`PVv_target` (Target velocity)
6083:0$_h$	`RAMP_v_acc` (Profile acceleration)
6084:0$_h$	`RAMP_v_dec` (Profile deceleration)
6060:0$_h$	`DCOMopmode` (Mode of operation)

Adapting the mapping for TxPDO

Index	Parameter name (DS402 name)
6041:0$_h$	`_DCOMstatus` (Status word)
6060:0$_h$	`_DCOMopmd_act` (Mode of operation display)

0198441113956, V1.00, 07.2013

Example

Meaning	Index	Parameter name (DS402 name)	Value
RxPDO: Set acceleration (for example, 100 min^{-1}/s)	6083:0_h	`RAMP_v_acc` (Profile acceleration)	64_h
RxPDO: Set deceleration (for example, 300 min^{-1}/s)	6084:0_h	`RAMP_v_dec` (Profile deceleration)	$012C_h$
RxPDO: Enable power stage	6040:0_h	`DCOMcontrol` (Control word)	00_h
	6040:0_h	`DCOMcontrol` (Control word)	06_h
	6040:0_h	`DCOMcontrol` (Control word)	$0F_h$
TxPDO: Check whether power stage has been enabled	6041:0_h	`_DCOMstatus` (Status word)	4637_h
RxPDO: Set the operating mode	6060:0_h	`DCOMopmode` (Mode of operation)	03_h
TxPDO: Check whether operating mode has been set	6061:0_h	`_DCOMopmd_act` (Mode of operation display)	03_h
RxPDO: Start movement by setting a target velocity (for example, 600 min^{-1})	60FF:0_h	`PVv_target` (Target velocity)	0258_h
TxPDO: Check whether target velocity has been reached	6041:0_h	`_DCOMstatus` (Status word)	0637_h
RxPDO: Terminate movement (with Quick Stop)	6040:0_h	`DCOMcontrol` (Control word)	$0B_h$
RxPDO: Reset Quick Stop	6040:0_h	`DCOMcontrol` (Control word)	$0F_h$

0198441113956, V1.00, 07.2013

8.3.5 Operating mode Profile Position

Description

In the operating mode Profile Position, a movement to a desired target position is performed.

A movement can be made using one of 2 methods:

- Relative movement
- Absolute movement

Relative movement

In the case of a relative movement, the movement is relative with reference to the previous target position or the current motor position.

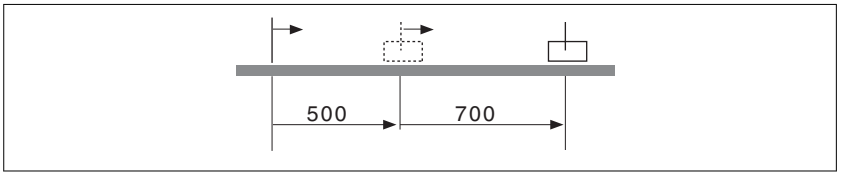

Absolute movement

In the case of an absolute movement, the movement is absolute with reference to the zero point.

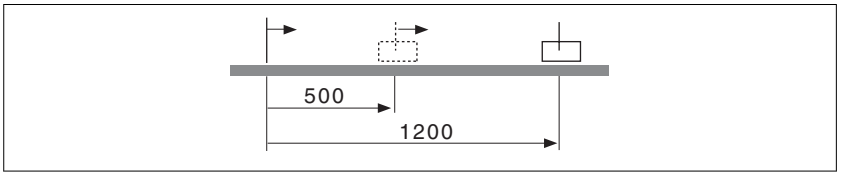

A zero point must be defined with the operating mode Homing prior to the first absolute movement.

Starting the operating mode

The operating mode must be set in the parameter `DCOMopmode`. Writing the parameter value activates the operating mode.

The movement is started via the control word.

Control word

The bits 4 ... 6 and the bits 8 ... 9 in the parameter `DCOMcontrol` start a movement.

Bit 9: Change on setpoint	Bit 5: Change setpoint immediately	Bit 4: New target value	Meaning
0	0	0->1	Starts a movement to a target position. Target values transmitted during a movement become immediately effective and are executed at the target. The movement is stopped at the current target position. [1)]
1	0	0->1	Starts a movement to a target position. Target values transmitted during a movement become immediately effective and are executed at the target. The movement is not stopped at the current target position. [1)]
x	1	0->1	Starts a movement to a target position. Target values transmitted during a movement become immediately effective and are immediately executed. [1)]

1) Target values include target position, target velocity, acceleration and deceleration.

0198441113956, V1.00, 07.2013

Parameter value	Meaning
Bit 6: Absolute / relative	0: Absolute movement 1: Relative movement
Bit 8: Halt	Stop movement with "Halt"

Status word

Information on the current movement is available via bits 10 and 12 ... 15 in the parameter `DCOMstatus`.

Parameter value	Meaning
Bit 10: Target reached	0: Halt = 0: Target position not reached Halt = 1: Motor decelerates 1: Halt = 0: Target position reached Halt = 1: Motor standstill
Bit 12: Target value acknowledge	0: New position possible 1: New target position accepted
Bit 13: x_err	1: Error detected
Bit 14: x_end	0: Operating mode started 1: Operating mode terminated
Bit 15: ref_ok	1: Zero point is valid

Terminating the operating mode

The operating mode is terminated when the motor is at a standstill and one of the following conditions is met:

- Target position reached
- Stop caused by "Halt" or "Quick Stop"
- Stop caused by a detected error

0198441113956, V1.00, 07.2013

8.3.5.1 Parameterization

Overview The illustration below provides an overview of the adjustable parameters.

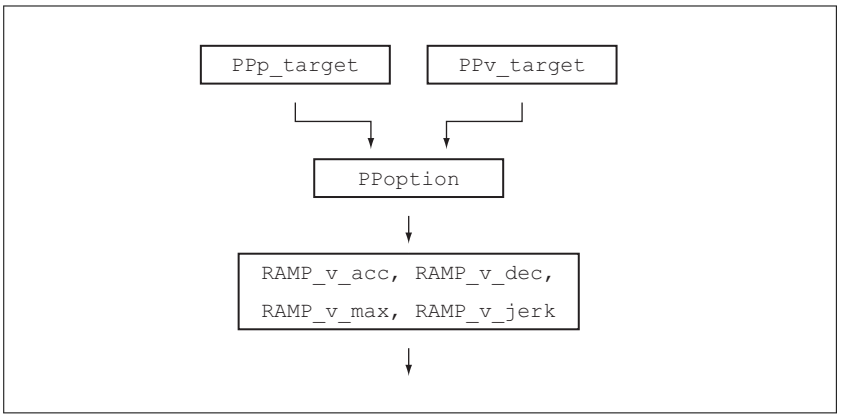

Figure 63: Overview of adjustable parameters

Target position The parameter `PPp_target` allows you to enter the target position.

- Set the desired target position with the parameter `PPp_target`.

Parameter name	Description	Unit Minimum value Factory setting Maximum value	Data type R/W Persistent Expert	Parameter address via field-bus
`PPp_target`	Target position for operating mode Profile Position Minimum/maximum values depend on: - Scaling factor - Software limit switches (if they are activated) Changed settings become active immediately.	usr_p - - -	INT32 INT32 R/W - -	CANopen 607A:0h Modbus 6940

Target velocity The parameter `PPv_target` allows you to set the target velocity.

- Set the target velocity with the parameter `PPv_target`.

Parameter name	Description	Unit Minimum value Factory setting Maximum value	Data type R/W Persistent Expert	Parameter address via field-bus
`PPv_target`	Target velocity for operating mode Profile Position The target velocity is limited to the setting in CTRL_v_max and RAMP_v_max. Changed settings become active the next time the motor moves.	usr_v 1 60 4294967295	UINT32 UINT32 R/W - -	CANopen 6081:0h Modbus 6942

Selection of the method The parameter `PPoption` allows you to set the method for a relative movement.

- Set the desired method for a relative movement with the parameter `PPoption`.

0198441113956, V1.00, 07.2013

Parameter name	Description	Unit Minimum value Factory setting Maximum value	Data type R/W Persistent Expert	Parameter address via field-bus
`PPoption`	Options for operating mode Profile Position Determines the reference position for relative positioning: 0: Relative with reference to the previous target position of the profile generator 1: Not supported 2: Relative with reference to the actual position of the motor Changed settings become active the next time the motor moves.	- 0 0 2	UINT16 UINT16 R/W - -	CANopen 60F2:0_h Modbus 6960

Changing the motion profile for the velocity

It is possible to change the parameterization of the motion profile for the velocity, see chapter "8.5.4 Setting the motion profile for the velocity".

8.3.5.2 Additional settings

The following functions can be used for target value processing:

- Chapter "8.6.1 Stop movement with Halt"
- Chapter "8.6.2 Stopping a movement with Quick Stop"
- Chapter "8.6.3 Limitation of the velocity via signal inputs"
- Chapter "8.6.4 Limitation of the current via signal inputs"
- Chapter "8.6.5 Jerk limitation"
- Chapter "8.6.7 Setting a signal output via parameter"
- Chapter "8.6.8 Starting a movement via a signal input"
- Chapter "8.6.9 Position capture via signal input"
- Chapter "8.6.10 Relative Movement After Capture (RMAC)"

The following functions can be used for monitoring the movement:

- Chapter "8.7.1 Limit switches"
- Chapter "8.7.3 Software limit switches"
- Chapter "8.7.4 Load-dependent position deviation (following error)"
- Chapter "8.7.5 Motor standstill and direction of movement"
- Chapter "8.7.8 Standstill window"
- Chapter "8.7.9 Position register"
- Chapter "8.7.10 Position deviation window"
- Chapter "8.7.11 Velocity deviation window"
- Chapter "8.7.12 Velocity threshold value"
- Chapter "8.7.13 Current threshold value"

0198441113956, V1.00, 07.2013

8.3.5.3 Example of a movement via DS402 objects

Adapting the list of the startup parameters

Index	Parameter name (DS402 name)	Value
3006:3D$_h$	`CompParSyncMot`	0
3006:38$_h$	`MOD_Enable`	0
3006:18$_h$	`LIM_QStopReact`	6
3006:6$_h$	`IOsigRespOfPS`	0
3006:7$_h$	`ScalePOSdenom`	16384
3006:8$_h$	`ScalePOSnum`	1
3012:6$_h$	`CTRL1_KFPp`	1000
3013:6$_h$	`CTRL2_KFPp`	1000
6060:0$_h$	`DCOMopmode` (Mode of operation)	1
1C33:3$_h$	`ECATinpshifttime`	250000

Adapting the mapping for RxPDO

Index	Parameter name (DS402 name)
6040:0$_h$	`DCOMcontrol` (Control word)
607A:0$_h$	`PPp_target` (Target position)
6081:0$_h$	`PPv_target` (Profile velocity)
6083:0$_h$	`RAMP_v_acc` (Profile acceleration)
6084:0$_h$	`RAMP_v_dec` (Profile deceleration)
6060:0$_h$	`DCOMopmode` (Mode of operation)

Adapting the mapping for TxPDO

Index	Parameter name (DS402 name)
6041:0$_h$	`_DCOMstatus` (Status word)
6060:0$_h$	`_DCOMopmd_act` (Mode of operation display)

0198441113956, V1.00, 07.2013

Example

Meaning	Index	Parameter name (DS402 name)	Value
RxPDO: Set acceleration (for example, 100 min^{-1}/s)	6083:0_h	`RAMP_v_acc` (Profile acceleration)	64_h
RxPDO: Set deceleration (for example, 300 min^{-1}/s)	6084:0_h	`RAMP_v_dec` (Profile deceleration)	$012C_h$
RxPDO: Set target velocity (for example, 60 min^{-1})	6081:0_h	`PPv_target` (Profile velocity)	$3C_h$
RxPDO: Enable power stage	6040:0_h	`DCOMcontrol` (Control word)	00_h
	6040:0_h	`DCOMcontrol` (Control word)	06_h
	6040:0_h	`DCOMcontrol` (Control word)	$0F_h$
TxPDO: Check whether power stage has been enabled	6041:0_h	`_DCOMstatus` (Status word)	4637_h
RxPDO: Set the operating mode	6060:0_h	`DCOMopmode` (Mode of operation)	01_h
TxPDO: Check whether operating mode has been set	6061:0_h	`_DCOMopmd_act` (Mode of operation display)	01_h
RxPDO: Set target position (for example, 10000_usr)	607A:0_h	`PPp_target` (Target position)	2710_h
RxPDO: start relative movement	6040:0_h	`DCOMcontrol` (Control word)	$5F_h$
TxPDO: Check whether target position has been reached	6041:0_h	`_DCOMstatus` (Status word)	5637_h
RxPDO: Rest bit "New setpoint"	6040:0_h	`DCOMcontrol` (Control word)	$4F_h$
TxPDO: Check whether new target position has been accepted	6041:0_h	`_DCOMstatus` (Status word)	4637_h

0198441113956, V1.00, 07.2013

8.3.6 Operating mode Homing

Description

In the operating mode Homing, a reference is generated between a mechanical position of the motor and the actual position.

The reference between a mechanical position of the motor and the actual position is generated by means of a successful reference movement or by means of position setting. This way, the motor is homed and the zero point becomes valid.

The zero point is the point of reference for absolute movements in the operating mode Profile Position.

Methods

A movement can be made using different methods:

- Reference movement to a limit switch

  In the case of a reference movement to a limit switch, a movement to the negative limit switch or the positive limit switch is performed.
  When the limit switch is reached, the motor is stopped and a movement is made back to the switching point of the limit switch.
  From the switching point of the limit switch, a movement is made to the next index pulse of the motor or to a parameterizable distance from the switching point.
  The position of the index pulse or the position of the parameterizable distance from the switching point is the reference point.
- Reference movement to the reference switch

  In the case of a reference movement to the reference switch, a movement to the reference switch is performed.
  When the reference switch is reached, the motor is stopped and a movement is made back to the switching point of the reference switch.
  From the switching point of the reference switch, a movement is made to the next index pulse of the motor or to a parameterizable distance from the switching point.
  The position of the index pulse or the position of the parameterizable distance from the switching point is the reference point.
- Reference movement to the index pulse

  In the case of a reference movement to the index pulse, a movement is made from the actual position to the next index pulse. The position of the index pulse is the reference point.
- Position setting

  In the case of position setting, the current motor position is set to a desired position value.

A reference movement must be terminated without interruption for the new zero point to be valid. If the reference movement is interrupted, it must be started again.

Motors with multiturn encoder deliver a valid zero point after they are switched on.

Starting the operating mode

The operating mode must be set in the parameter `DCOMopmode`. Writing the parameter value activates the operating mode.

The movement is started via the control word.

The parameter `HMmethod` lets you set the method.

0198441113956, V1.00, 07.2013

Control word

The bits 4 ... 6 and the bits 8 ... 9 in the parameter `DCOMcontrol` start a movement.

Parameter value	Meaning
Bit 4: Homing operation start	Start Homing
Bit 5: Reserved	Not relevant for this operating mode
Bit 6: Reserved	Not relevant for this operating mode
Bit 8: Halt	Stop movement with "Halt"
Bit 9: Reserved	Not relevant for this operating mode

Status word

Information on the current movement is available via bits 10 and 12 ... 15 in the parameter `DCOMstatus`.

Parameter value	Meaning
Bit 10: Target reached	0: Homing not completed 1: Homing completed
Bit 12: Homing attained	1: Homing successfully completed
Bit 13: x_err	1: Error detected
Bit 14: x_end	0: Operating mode started 1: Operating mode terminated
Bit 15: ref_ok	1: Zero point is valid

Terminating the operating mode

The operating mode is terminated when the motor is at a standstill and one of the following conditions is met:

- Homing successful
- Stop caused by "Halt" or "Quick Stop"
- Stop caused by a detected error

0198441113956, V1.00, 07.2013

8.3.6.1 Parameterization

Overview

The illustration below provides an overview of the adjustable parameters.

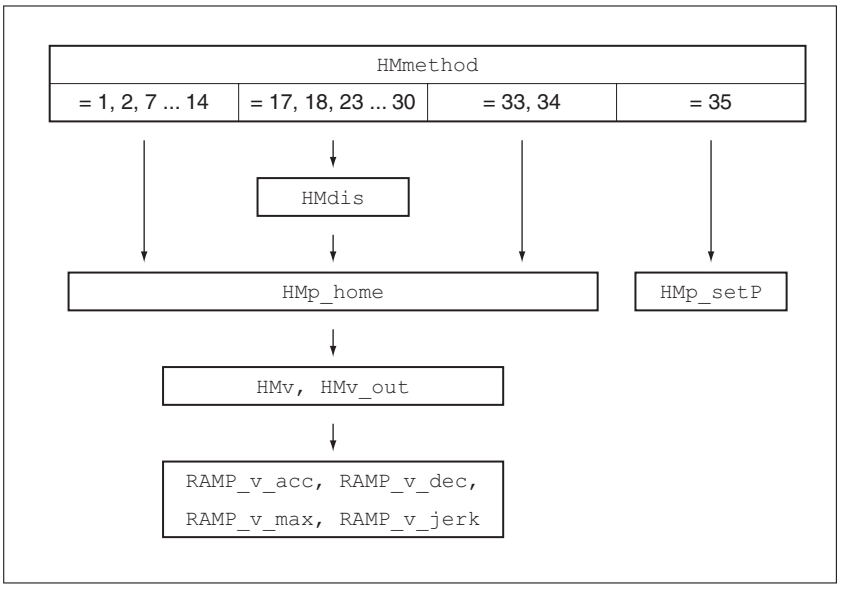

Figure 64: Overview of adjustable parameters

Setting limit switches and reference switches

The limit switches and reference switches must be set to meet the requirements, see chapter "8.7.1 Limit switches" and chapter "8.7.2 Reference switch".

Selection of the method

The operating mode Homing establishes an absolute position reference between the motor position and a defined axis position. There are various Homing methods which can be selected via the parameter `HMmethod`.

The `HMprefmethod` parameter is used to save the preferred method to the EEPROM (persistent). When the preferred method has been set in this parameter, the method is performed during homing even after the device is switched off and on. The value to be entered corresponds to the value in the `HMmethod` parameter.

0198441113956, V1.00, 07.2013

Parameter name	Description	Unit Minimum value Factory setting Maximum value	Data type R/W Persistent Expert	Parameter address via field-bus
`HMmethod`	Homing method 1: LIMN with index pulse 2: LIMP with index pulse 7: REF+ with index pulse, inv., outside 8: REF+ with index pulse, inv., inside 9: REF+ with index pulse, not inv., inside 10: REF+ with index pulse, not inv., outside 11: REF- with index pulse, inv., outside 12: REF- with index pulse, inv., inside 13: REF- with index pulse, not inv., inside 14: REF- with index pulse, not inv., outside 17: LIMN 18: LIMP 23: REF+, inv., outside 24: REF+, inv., inside 25: REF+, not inv., inside 26: REF+, not inv., outside 27: REF-, inv., outside 28: REF-, inv., inside 29: REF-, not inv., inside 30: REF-, not inv., outside 33: Index pulse neg. direction 34: Index pulse pos. direction 35: Position setting Abbreviations: REF+: Search movement in pos. direction REF-: Search movement in neg. direction inv.: Invert direction in switch not inv.: Direction not inverted in switch outside: Index pulse / distance outside switch inside: Index pulse / distance inside switch Changed settings become active immediately.	- 1 18 35	INT8 INT16 R/W - -	CANopen 6098:0_h Modbus 6936
`HMprefmethod`	Preferred homing method Changed settings become active immediately.	- 1 18 35	INT16 INT16 R/W per. -	CANopen 3028:A_h Modbus 10260

Setting the distance from the switching point

A distance to the switching point of the limit switch or the reference switch must be parameterized for a reference movement with index pulse. The parameter `HMdis` lets you set the distance to the switching limit switch or the reference switch.

0198441113956, V1.00, 07.2013

Parameter name	Description	Unit Minimum value Factory setting Maximum value	Data type R/W Persistent Expert	Parameter address via fieldbus
HMdis	Distance from switching point The distance from the switching point is defined as the reference point. The parameter is only effective during a reference movement without index pulse. Changed settings become active the next time the motor moves.	usr_p 1 200 2147483647	INT32 INT32 R/W per. -	CANopen 3028:7_h Modbus 10254

Defining the zero point

The parameter HMp_home is used to specify a desired position value, which is set at the reference point after a successful reference movement. The desired position value at the reference point defines the zero point.

NOTE: If the value 0 is used, the zero point corresponds to the reference point.

Parameter name	Description	Unit Minimum value Factory setting Maximum value	Data type R/W Persistent Expert	Parameter address via fieldbus
HMp_home	Position at reference point After a successful reference movement, this position is automatically set at the reference point. Changed settings become active the next time the motor moves.	usr_p -2147483648 0 2147483647	INT32 INT32 R/W per. -	CANopen 3028:B_h Modbus 10262

Setting monitoring

The parameters HMoutdis and HMsrchdis allow you to activate monitoring of the limit switchs and the reference switch.

0198441113956, V1.00, 07.2013

Parameter name	Description	Unit Minimum value Factory setting Maximum value	Data type R/W Persistent Expert	Parameter address via field-bus
`HMoutdis`	Maximum distance for search for switching point 0: Monitoring of distance inactive >0: Maximum distance After detection of the switch, the drive starts to search for the defined switching point. If the defined switching point is not found within the distance defined here, the reference movement is canceled with an error. Changed settings become active the next time the motor moves.	usr_p 0 0 2147483647	INT32 INT32 R/W per. -	CANopen 3028:6h Modbus 10252
`HMsrchdis`	Maximum search distance after overtravel of switch 0: Search distance monitoring disabled >0: Search distance The switch must be activated again within this search distance, otherwise the reference movement is canceled. Changed settings become active the next time the motor moves.	usr_p 0 0 2147483647	INT32 INT32 R/W per. -	CANopen 3028:Dh Modbus 10266

Reading out the position distance

The position distance between the switching point and index pulse can be read out with the following parameters.

The distance between the switching point and the index pulse must be >0.05 revolutions for reproducible reference movements with index pulse.

If the index pulse is too close to the switching point, the limit switch or reference switch can be moved mechanically.

Otherwise the position of the index pulse can be moved with the parameter `ENC_pabsusr`, see Chapter "7.5.8 Setting parameters for encoder".

0198441113956, V1.00, 07.2013

Parameter name	Description	Unit Minimum value Factory setting Maximum value	Data type R/W Persistent Expert	Parameter address via fieldbus
`_HMdisREFtoIDX_usr`	Distance from switching point to index pulse It allows to check the distance between the index pulse and the switching point and serves as a criterion for determining whether the reference movement with index pulse can be reproduced.	usr_p -2147483648 - 2147483647	INT32 INT32 R/- - -	CANopen 3028:F_h Modbus 10270
`_HMdisREFtoIDX`	Distance from switching point to index pulse It allows to check the distance between the index pulse and the switching point and serves as a criterion for determining whether the reference movement with index pulse can be reproduced. The parameter _HMdisREFtoIDX_usr allows you to enter the value in user-defined units. In increments of 0.0001 revolution.	revolution - - -	INT32 INT32 R/- - -	CANopen 3028:C_h Modbus 10264

Setting velocities

The parameters `HMv` and `HMv_out` are used to set the velocities for searching the switch and for moving away from the switch.

Parameter name	Description	Unit Minimum value Factory setting Maximum value	Data type R/W Persistent Expert	Parameter address via field-bus
`HMv`	Target velocity for searching the switch The adjustable value is internally limited to the current parameter setting in RAMP_v_max. Changed settings become active the next time the motor moves.	usr_v 1 60 2147483647	UINT32 UINT32 R/W per. -	CANopen 6099:1_h Modbus 10248
`HMv_out`	Target velocity for moving away from switch The adjustable value is internally limited to the current parameter setting in RAMP_v_max. Changed settings become active the next time the motor moves.	usr_v 1 6 2147483647	UINT32 UINT32 R/W per. -	CANopen 6099:2_h Modbus 10250

Changing the motion profile for the velocity

It is possible to change the parameterization of the motion profile for the velocity, see chapter "8.5.4 Setting the motion profile for the velocity".

0198441113956, V1.00, 07.2013

8.3.6.2 Reference movement to a limit switch

The illustration below shows a reference movement to a limit switch

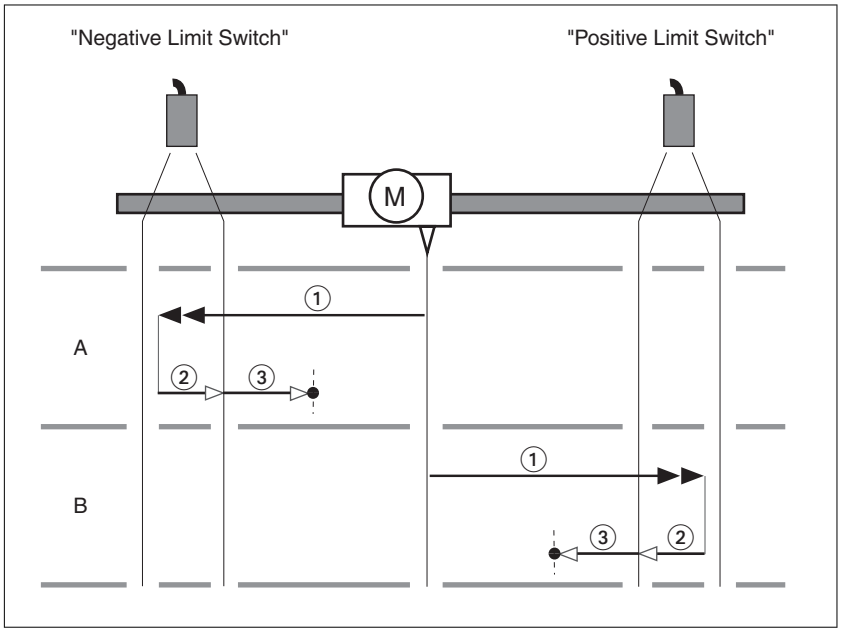

Figure 65: Reference movement to a limit switch

(1) Movement to limit switch at velocity `HMv`

(2) Movement to the switching point of the limit switch at velocity `HMv_out`

(3) Movement to index pulse or movement to a distance from the switching point at velocity `HMv_out`

Type A Method 1: Movement to the index pulse.

Method 17: Movement to distance from switching point.

Type B Method 2: Movement to the index pulse.

Method 18: Movement to distance from switching point.

0198441113956, V1.00, 07.2013

8.3.6.3 Reference movement to the reference switch in positive direction

The illustration below shows a reference movement to the reference switch in positive direction

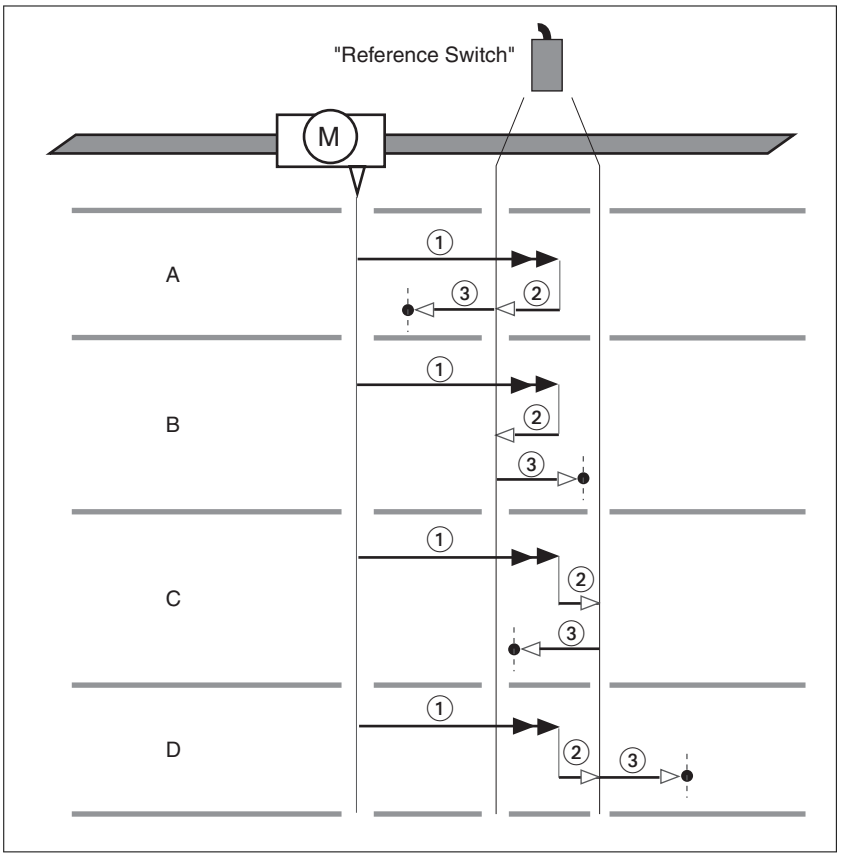

Figure 66: Reference movement to the reference switch in positive direction

(1) Movement to reference switch at velocity `HMv`

(2) Movement to the switching point of the reference switch at velocity `HMv_out`

(3) Movement to index pulse or movement to a distance from the switching point at velocity `HMv_out`

Type A Method 7: Movement to the index pulse.

Method 23: Movement to distance from switching point.

Type B Method 8: Movement to the index pulse.

Method 24: Movement to distance from switching point.

Type C Method 9: Movement to the index pulse.

Method 25: Movement to distance from switching point.

Type D Method 10: Movement to the index pulse.

Method 26: Movement to distance from switching point.

0198441113956, V1.00, 07.2013

8.3.6.4 Reference movement to the reference switch in negative direction

The illustration below shows a reference movement to the reference switch in negative direction

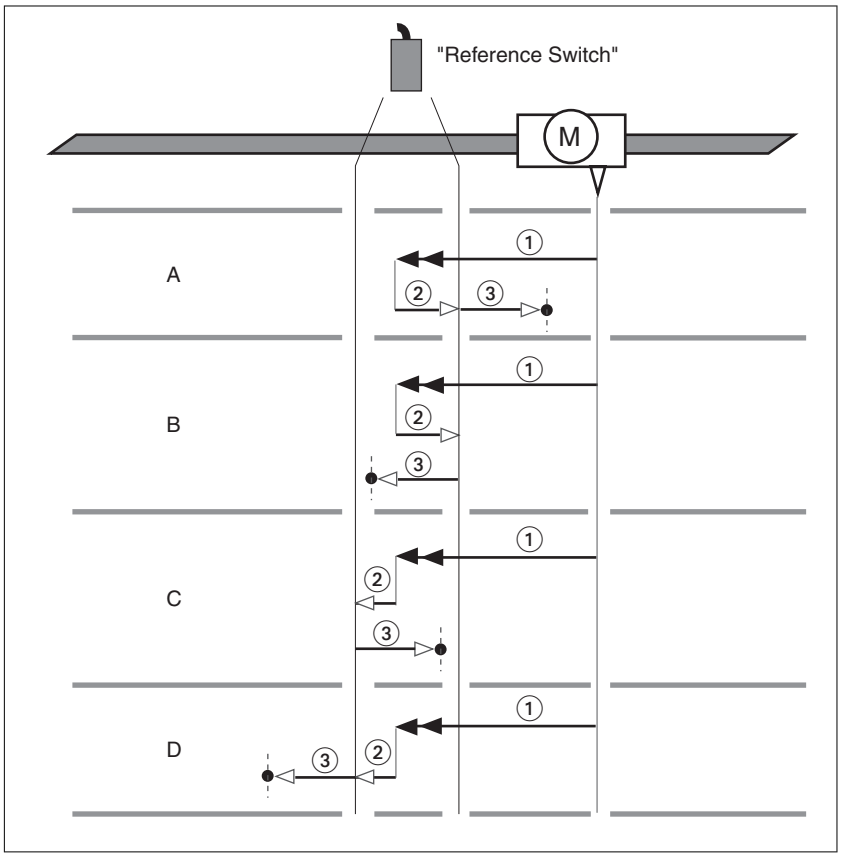

Figure 67: Reference movement to the reference switch in negative direction

(1) Movement to reference switch at velocity `HMv`

(2) Movement to the switching point of the reference switch at velocity `HMv_out`

(3) Movement to index pulse or movement to a distance from the switching point at velocity `HMv_out`

Type A Method 11: Movement to the index pulse.

Method 27: Movement to distance from switching point.

Type B Method 12: Movement to the index pulse.

Method 28: Movement to distance from switching point.

Type C Method 13: Movement to the index pulse.

Method 29: Movement to distance from switching point.

Type D Method 14: Movement to the index pulse.

Method 30: Movement to distance from switching point.

0198441113956, V1.00, 07.2013

8.3.6.5 Reference movement to the index pulse

The illustration below shows a reference movement to the index pulse

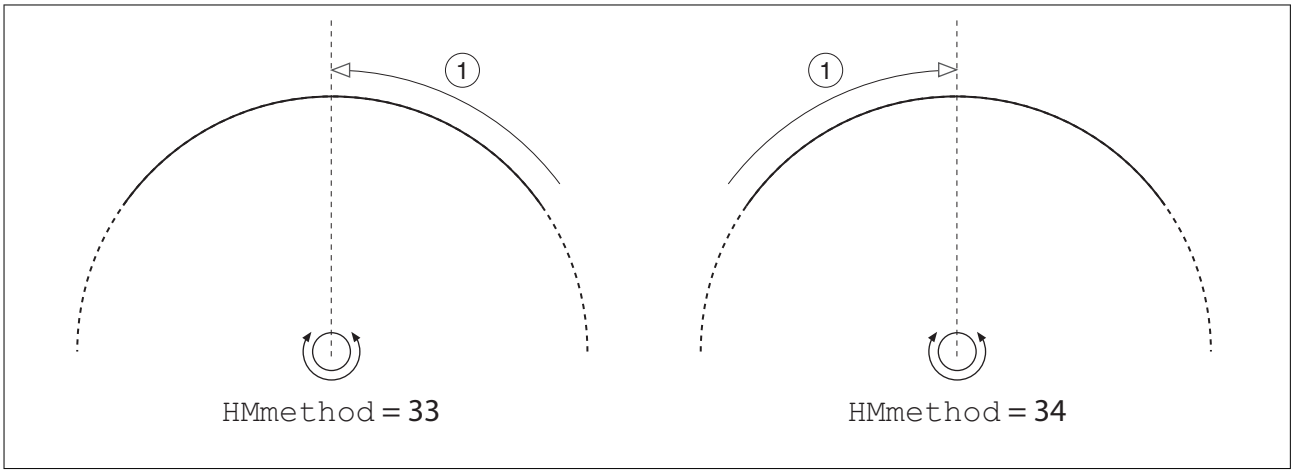

Figure 68: Reference movement to the index pulse

(1) Movement to index pulse at velocity `HMv_out`

0198441113956, V1.00, 07.2013

8.3.6.6 Position setting

Description

By means of position setting, the current motor position is set to the position value in parameter `HMp_setP`. This also defines the zero point.

Position setting is only possible when the motor is at a standstill. Any active position deviation remains active and can still be compensated for by the position controller after position setting.

Setting the position for position setting

Parameter name	Description	Unit Minimum value Factory setting Maximum value	Data type R/W Persistent Expert	Parameter address via fieldbus
`HMp_setP`	Position for Position Setting Position for operating mode Homing, method 35. Changed settings become active immediately.	usr_p - 0 -	INT32 INT32 R/W - -	CANopen 301B:16h Modbus 6956

Example

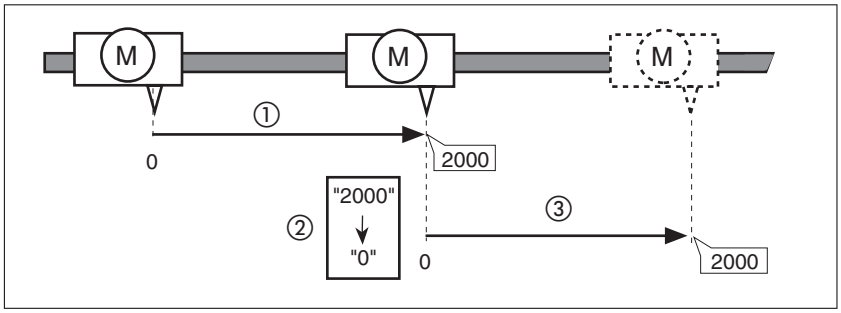

Figure 69: Movement by 4000 user-defined units with position setting

(1) The motor is positioned by 2000 user-defined units.

(2) By means of position setting to 0, the current motor position is set to position value 0 which, at the same time, defines a new zero point.

(3) When a new movement by 2000 user-defined units is triggered, the new target position is 2000 user-defined units.

0198441113956, V1.00, 07.2013

8.3.6.7 Additional settings

The following functions can be used for target value processing:

- Chapter "8.6.1 Stop movement with Halt"
- Chapter "8.6.2 Stopping a movement with Quick Stop"
- Chapter "8.6.3 Limitation of the velocity via signal inputs"
- Chapter "8.6.4 Limitation of the current via signal inputs"
- Chapter "8.6.5 Jerk limitation"
- Chapter "8.6.7 Setting a signal output via parameter"
- Chapter "8.6.9 Position capture via signal input"

The following functions can be used for monitoring the movement:

- Chapter "8.7.1 Limit switches"
- Chapter "8.7.2 Reference switch"
- Chapter "8.7.3 Software limit switches"
- Chapter "8.7.4 Load-dependent position deviation (following error)"
- Chapter "8.7.5 Motor standstill and direction of movement"
- Chapter "8.7.8 Standstill window"
- Chapter "8.7.9 Position register"
- Chapter "8.7.10 Position deviation window"
- Chapter "8.7.11 Velocity deviation window"
- Chapter "8.7.12 Velocity threshold value"
- Chapter "8.7.13 Current threshold value"

0198441113956, V1.00, 07.2013

8.3.6.8 Example of a movement via DS402 objects

Adapting the list of the startup parameters

Index	Parameter name (DS402 name)	Value
3006:3D$_h$	CompParSyncMot	0
3006:38$_h$	MOD_Enable	0
3006:18$_h$	LIM_QStopReact	6
3006:6$_h$	IOsigRespOfPS	0
3006:7$_h$	ScalePOSdenom	16384
3006:8$_h$	ScalePOSnum	1
3012:6$_h$	CTRL1_KFPp	1000
3013:6$_h$	CTRL2_KFPp	1000
6060:0$_h$	DCOMopmode (Mode of operation)	6
1C33:3$_h$	ECATinpshifttime	250000

Adapting the mapping for RxPDO

Index	Parameter name (DS402 name)
6040:0$_h$	DCOMcontrol (Control word)
6060:0$_h$	DCOMopmode (Mode of operation)

Adapting the mapping for TxPDO

Index	Parameter name (DS402 name)
6041:0$_h$	_DCOMstatus (Status word)
6060:0$_h$	_DCOMopmd_act (Mode of operation display)

Example

Meaning	Index	Parameter name (DS402 name)	Value
SDO: Set homing method (for example 17)	6098:0$_h$	HMmethod (Homing method)	11$_h$
SDO: Set target velocity for searching the switch (for example, 100 min^{-1})	6099:1$_h$	HMv (Homing speed during search for switch)	64$_h$
SDO: Target velocity for moving away from switch (for example 6 min^{-1})	6099:2$_h$	HMv_out (Speed during search for zero)	6$_h$
RxPDO: Enable power stage	6040:0$_h$	DCOMcontrol (Control word)	00$_h$
	6040:0$_h$	DCOMcontrol (Control word)	06$_h$
	6040:0$_h$	DCOMcontrol (Control word)	0F$_h$
TxPDO: Check whether power stage has been enabled	6041:0$_h$	_DCOMstatus (Status word)	4637$_h$
RxPDO: Set the operating mode	6060:0$_h$	DCOMopmode (Mode of operation)	06$_h$
TxPDO: Check whether operating mode has been set	6061:0$_h$	_DCOMopmd_act (Mode of operation display)	06$_h$
RxPDO: Start Homing	6040:0$_h$	DCOMcontrol (Control word)	1F$_h$
TxPDO: Check whether Homing has been successful	6041:0$_h$	_DCOMstatus (Status word)	D637$_h$

0198441113956, V1.00, 07.2013

8.3.7 Operating mode Cyclic Synchronous Torque

The motor synchronously follows the target torque values transmitted on a cyclic basis. The transmitted values are linearly interpolated (internally).

The possible applications for this operating mode are described in the manual of the master controller.

Starting the operating mode

The operating mode is set in the parameter `DCOMopmode`.

A transition to the operating state **6** Operation Enabled starts the set operating mode.

The parameter `PTtq_target` provides the target value.

Parameter name	Description	Unit Minimum value Factory setting Maximum value	Data type R/W Persistent Expert	Parameter address via fieldbus
`PTtq_target`	Target torque for operating mode Profile Torque 100.0 % correspond to the continuous stall torque _M_M_0. In increments of 0.1 %. Changed settings become active immediately.	% -3000.0 0.0 3000.0	INT16 INT16 R/W - -	CANopen 6071:0h Modbus 6944

Control word

In the operating mode, the operating mode-specific bits in the control word have no significance.

Status word

Information on the current movement is available via bits 10 and 12 ... 15 in the parameter `DCOMstatus`.

Parameter value	Meaning
Bit 10: Reserved	Not relevant for this operating mode
Bit 12: Drive follows the command value	0: Target torque ignored 1: Target torque used as input to torque control loop
Bit 13: Reserved	Not relevant for this operating mode
Bit 14: x_end	0: Operating mode started 1: Operating mode terminated
Bit 15: ref_ok	1: Zero point is valid

Terminating the operating mode

The operating mode is terminated when a different operating mode is selected or when the operating state **6** Operation Enabled is left.

0198441113956, V1.00, 07.2013

8.3.8 Operating mode Cyclic Synchronous Velocity

The motor synchronously follows the target velocity values transmitted on a cyclic basis. The transmitted values are linearly interpolated (internally).

The possible applications for this operating mode are described in the manual of the master controller.

Starting the operating mode

The operating mode is set in the parameter `DCOMopmode`.

A transition to the operating state **6** Operation Enabled starts the set operating mode.

The parameter `PVv_target` provides the target value.

Parameter name	Description	Unit Minimum value Factory setting Maximum value	Data type R/W Persistent Expert	Parameter address via fieldbus
`PVv_target`	Target velocity for operating mode Profile Velocity The target velocity is limited to the setting in CTRL_v_max and RAMP_v_max. Changed settings become active immediately.	usr_v - 0 -	INT32 INT32 R/W - -	CANopen 60FF:0h Modbus 6938

Control word

In the operating mode, the operating mode-specific bits in the control word have no significance.

Status word

Information on the current movement is available via bits 10 and 12 ... 15 in the parameter `DCOMstatus`.

Parameter value	Meaning
Bit 10: Reserved	Not relevant for this operating mode
Bit 12: Drive follows the command value	0: Target velocity ignored 1: Target velocity used as input to velocity control loop
Bit 13: Reserved	Not relevant for this operating mode
Bit 14: x_end	0: Operating mode started 1: Operating mode terminated
Bit 15: ref_ok	1: Zero point is valid

Terminating the operating mode

The operating mode is terminated when a different operating mode is selected or when the operating state **6** Operation Enabled is left.

0198441113956, V1.00, 07.2013

8.3.9 Operating mode Cyclic Synchronous Position

The motor synchronously follows the target position values transmitted on a cyclic basis. The transmitted values are linearly interpolated (internally).

The possible applications for this operating mode are described in the manual of the master controller.

Starting the operating mode

The operating mode is set in the parameter `DCOMopmode`.

A transition to the operating state **6** Operation Enabled starts the set operating mode.

The parameter `PPp_target` provides the target value.

Parameter name	Description	Unit Minimum value Factory setting Maximum value	Data type R/W Persistent Expert	Parameter address via fieldbus
`PPp_target`	Target position for operating mode Profile Position Minimum/maximum values depend on: - Scaling factor - Software limit switches (if they are activated) Changed settings become active immediately.	usr_p - - -	INT32 INT32 R/W - -	CANopen 607A:0h Modbus 6940

Control word

In the operating mode, the operating mode-specific bits in the control word have no significance.

Status word

Information on the current movement is available via bits 10 and 12 ... 15 in the parameter `DCOMstatus`.

Parameter value	Meaning
Bit 10: Reserved	Not relevant for this operating mode
Bit 12: Drive follows the command value	0: Target position ignored 1: Target position used as input to position control loop
Bit 13:	0: No following error 1: Following error
Bit 14: x_end	0: Operating mode started 1: Operating mode terminated
Bit 15: ref_ok	1: Zero point is valid

Terminating the operating mode

The operating mode is terminated when a different operating mode is selected or when the operating state **6** Operation Enabled is left.

0198441113956, V1.00, 07.2013

8.4 Movement range

The movement range is the maximum possible range within which a movement can be made to any position.

The actual position of the motor is the position in the movement range.

The figure below shows the movement range in user-defined units with the factory scaling.

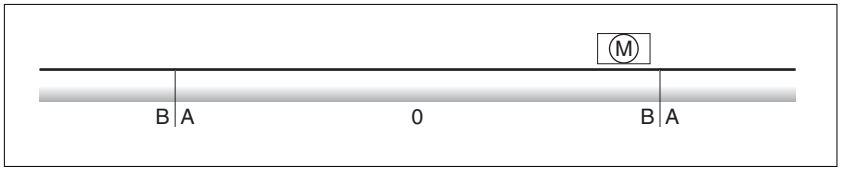

Figure 70: Movement range

(A) -268435456 user-defined units (usr_p)

(B) 268435455 user-defined units (usr_p)

Availability The movement range is relevant in the following operating modes:

- Jog
- Profile Position
- Homing

8.4.1 Zero point of the movement range

The zero point of the movement range is the point of reference for absolute movements in the operating mode Profile Position.

Valid zero point The zero point of the movement range is set by means of a reference movement or by position setting.

A reference movement and position setting can be performed in the operating mode Homing.

In the case of a movement beyond the movement range (for example, a relative movement), the zero point becomes invalid.

0198441113956, V1.00, 07.2013

8.4.2 Movement beyond the movement range

The behavior in the case of a movement beyond the movement range depends on the operating mode and the type of movement.

The following behavior is possible:

- In the case of a movement beyond the movement range, the movement range restarts.
- In the case of a movement with a target position outside of the movement range, position setting to 0 is performed before the movement is started.

The behavior can be set by means of the parameter `PP_ModeRangeLim`.

Parameter name	Description	Unit Minimum value Factory setting Maximum value	Data type R/W Persistent Expert	Parameter address via field-bus
`PP_ModeRangeLim`	Absolute movement beyond movement range **0 / NoAbsMoveAllowed**: Absolute movement beyond movement range is not possible **1 / AbsMoveAllowed**: Absolute movement beyond movement range is possible Setting can only be changed if power stage is disabled. Changed settings become active the next time the power stage is enabled.	- 0 0 1	UINT16 UINT16 R/W per. -	CANopen 3023:7$_h$ Modbus 8974

8.4.2.1 Behavior for operating mode Jog

Continuous movement Behavior for continuous movement beyond the movement range:

- The movement range restarts.

Step movement Behavior for step movement beyond the movement range:

- Setting in parameter `PP_ModeRangeLim` = 0:

  Internal position setting to 0.
- Setting in parameter `PP_ModeRangeLim` = 1:

  The movement range restarts.

0198441113956, V1.00, 07.2013

8.4.2.2 Behavior for operating mode Profile Position

Relative movement

Behavior for relative movement beyond the movement range:

- Setting in parameter `PP_ModeRangeLim` = 0:

  Internal position setting to 0.

  A relative movement is only possible when the motor is at a standstill.
- Setting in parameter `PP_ModeRangeLim` = 1:

  The movement range restarts.

  A relative movement is possible when the motor is at a standstill and during movements

Absolute movement

Behavior for absolute movement:

- Setting in parameter `PP_ModeRangeLim` = 0:

  An absolute movement is made within the movement range. A relative movement beyond the movement range is not possible.
- Setting in parameter `PP_ModeRangeLim` = 1:

  A relative movement beyond the movement range is possible.

Example:

Actual position: 268435000 user-defined units (usr_p)
Target position absolute: -268435000 user-defined units (usr_p)

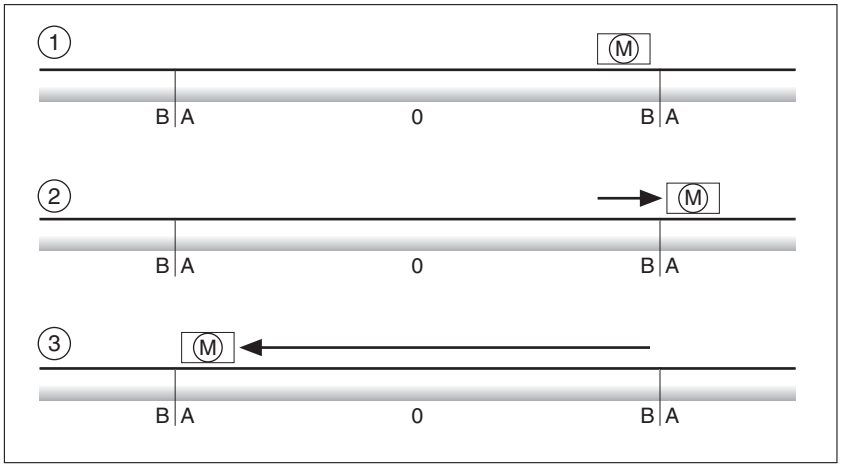

Figure 71: Absolute movement

(A) -268435456 user-defined units (usr_p)
(B) 268435455 user-defined units (usr_p)
(1) Actual position: 268435000 user-defined units
(2) Absolute movement to -268435000 user-defined units
Parameter `PP_ModeRangeLim` = 1
(3) Absolute movement to -268435000 user-defined units
Parameter `PP_ModeRangeLim` = 0

0198441113956, V1.00, 07.2013

8.4.3 Setting a modulo range

Description

The modulo range supports applications with repeating arrangements of target positions (such as rotary indexing tables). The target positions are mapped to a parameterizable movement range.

Direction of movement

The direction of movement for absolute target positions can be adjusted to meet the requirements of the application.

- Shortest distance
- Positive direction of movement only
- Negative direction of movement only

Multiple modulo range

In addition, it is possible to set a multiple modulo range for absolute target positions. A movement with an absolute target position beyond the modulo range is performed in a way as if several modulo ranges had been arranged one after the other.

Example:

- Modulo range
  - Minimum position: 0 usr_p
  - Maximum position: 3600 usr_p
- Actual position: 700 usr_p
- Target positions absolute: 5000 usr_p
- Left: Without multiple modulo range
  Right: With multiple modulo range

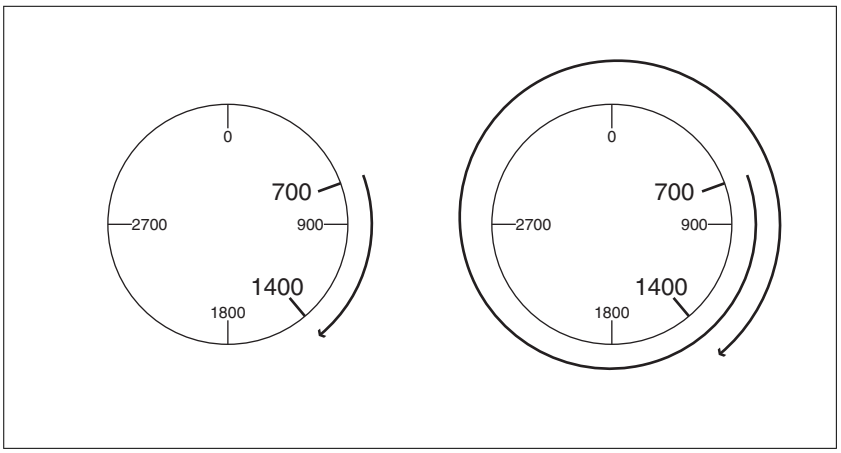

Figure 72: Multiple modulo range

0198441113956, V1.00, 07.2013

8.4.3.1 Parameterization

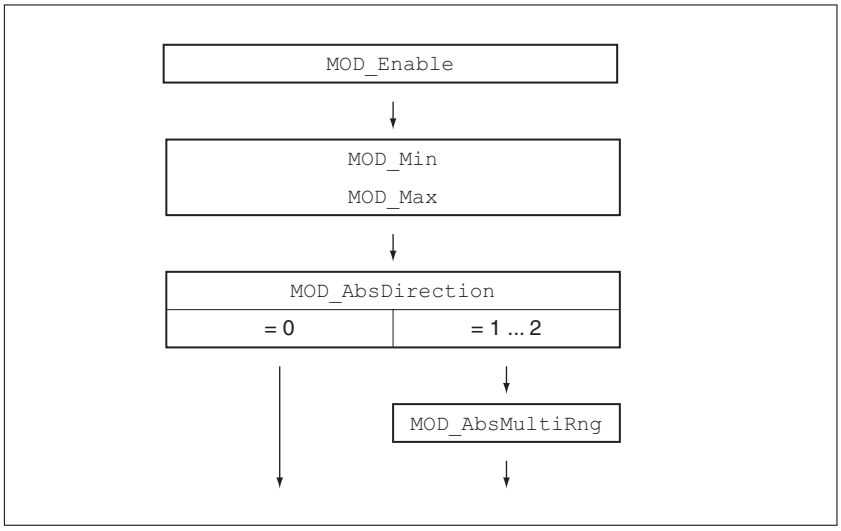

Figure 73: Overview of parameters

General Using a modulo range requires the scaling to be adapted. The scaling of the motor must be adapted to the requirements of the application, see chapter "8.5.1 Scaling".

Activation The modulo range is activated with the parameter `MOD_Enable`.

Parameter name	Description	Unit Minimum value Factory setting Maximum value	Data type R/W Persistent Expert	Parameter address via field-bus
`MOD_Enable`	Activation of Modulo **0 / Modulo Off**: Modulo is off **1 / Modulo On**: Modulo is on Activating Modulo does not automatically change the value of other parameters. Before changing this value, verify that the parameter settings for the intended application are correct. NOTE: Modulo must be deactivated for Autotuning. Setting can only be changed if power stage is disabled. Changed settings become active immediately.	- 0 0 1	UINT16 UINT16 R/W per. -	CANopen 3006:38$_h$ Modbus 1648

Modulo range The parameters `MOD_Min` and `MOD_Max` can be used to set the modulo range.

0198441113956, V1.00, 07.2013

Parameter name	Description	Unit Minimum value Factory setting Maximum value	Data type R/W Persistent Expert	Parameter address via field-bus
MOD_Min	Minimum position of modulo range The minimum position value of the modulo range must be less than the maximum position value of the modulo range. The value must not exceed the maximum possible value of position scaling _ScalePOSmax. Setting can only be changed if power stage is disabled. Changed settings become active immediately.	usr_p - 0 -	INT32 INT32 R/W per. -	CANopen 3006:39h Modbus 1650
MOD_Max	Maximum position of modulo range The maximum position value of the modulo range must be greater than the minimum position value of the modulo range. The value must not exceed the maximum possible value of position scaling _ScalePOSmax. Setting can only be changed if power stage is disabled. Changed settings become active immediately.	usr_p - 3600 -	INT32 INT32 R/W per. -	CANopen 3006:3Ah Modbus 1652

Direction for absolute movements

The parameter MOD_AbsDirection lets you set the direction of movement for absolute movements.

Parameter name	Description	Unit Minimum value Factory setting Maximum value	Data type R/W Persistent Expert	Parameter address via field-bus
MOD_AbsDirection	Direction of absolute movement with Modulo **0 / Shortest Distance**: Movement with shortest distance **1 / Positive Direction**: Movement only in positive direction **2 / Negative Direction**: Movement only in negative direction If the parameter is set to 0, the drive calculates the shortest way to the new target position and starts the movement in the corresponding direction. If the distance to the target position is identical in positive and negative directions, the movement takes place in positive direction. Changed settings become active immediately.	- 0 0 2	UINT16 UINT16 R/W per. -	CANopen 3006:3Bh Modbus 1654

Multiple modulo range for absolute movements

The parameter MOD_AbsMultiRng lets you set a multiple modulo range for absolute movements.

0198441113956, V1.00, 07.2013

Parameter name	Description	Unit Minimum value Factory setting Maximum value	Data type R/W Persistent Expert	Parameter address via field-bus
`MOD_AbsMultiRng`	Multiple ranges for absolut movement with Modulo **0 / Multiple Ranges Off**: Absolute movement in one modulo range **1 / Multiple Ranges On**: Absolute movement in multiple modulo ranges Changed settings become active immediately.	- 0 0 1	UINT16 UINT16 R/W per. -	CANopen 3006:3C$_h$ Modbus 1656

0198441113956, V1.00, 07.2013

8.4.3.2 Examples with relative movements

Assumptions The settings below are assumed for the examples.

- Rotary motor
- Position scaling
  - Numerator: 1
  - Denominator: 3600
- Modulo range
  - Minimum position: 0 usr_p
  - Maximum position: 3600 usr_p
- Actual position: 700 usr_p

Example 1 Target positions relative: 500 usr_p and 3300 usr_p

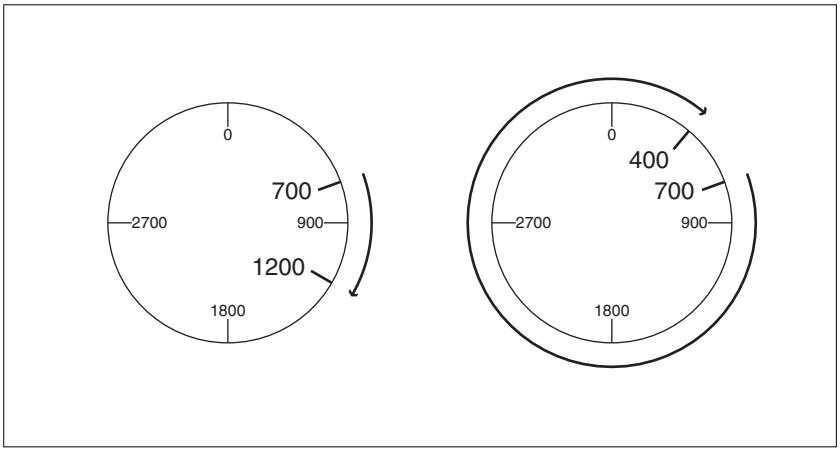

Figure 74: Example 1

Example 2 Target positions relative: -500 usr_p and -3300 usr_p

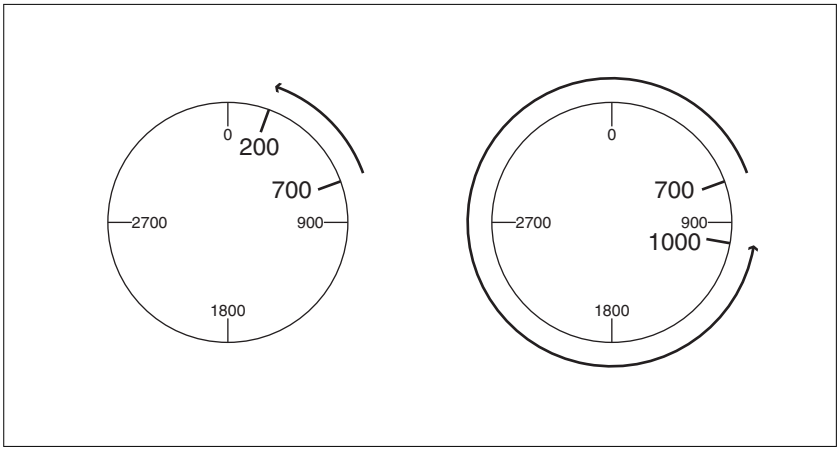

Figure 75: Example 2

0198441113956, V1.00, 07.2013

8.4.3.3 Examples with absolute movements and "Shortest Distance"

Assumptions The settings below are assumed for the examples.

- Rotary motor
- Position scaling
  - Numerator: 1
  - Denominator: 3600
- Modulo range
  - Minimum position: 0 usr_p
  - Maximum position: 3600 usr_p
- Actual position: 700 usr_p

Example 1 Target positions absolute: 1500 usr_p and 5000 usr_p

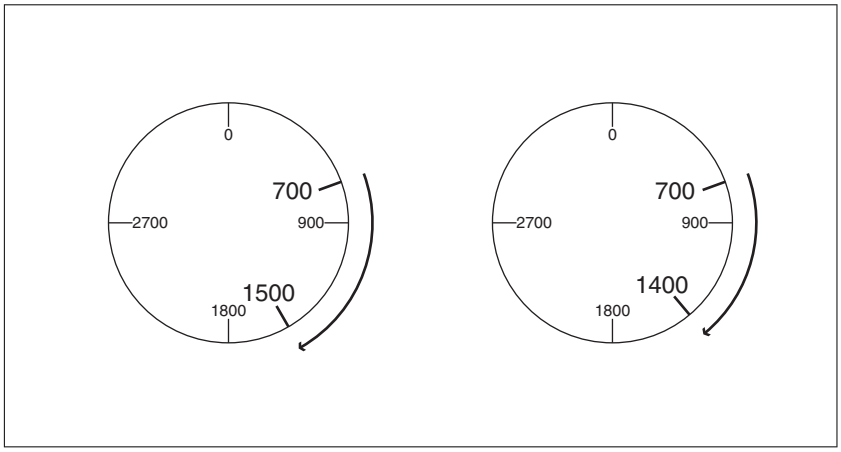

Figure 76: Example 1

Example 2 Target positions absolute: 2500 usr_p and 2900 usr_p

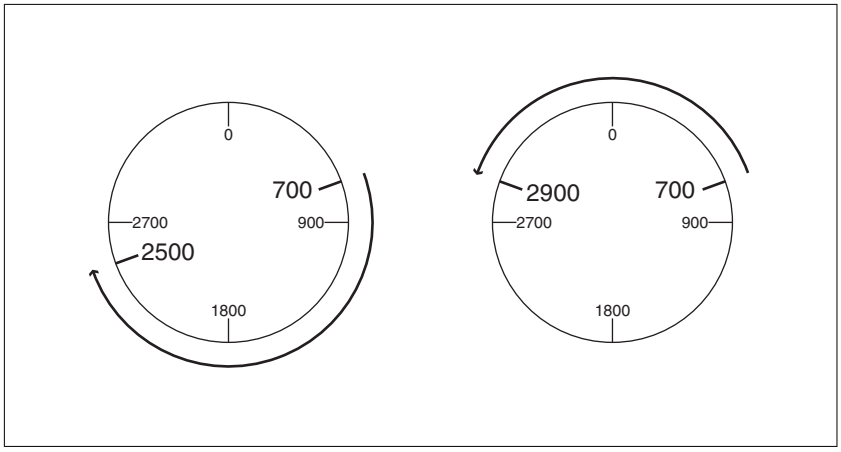

Figure 77: Example 2

0198441113956, V1.00, 07.2013

8.4.3.4 Examples with absolute movements and "Positive Direction"

Assumptions The settings below are assumed for the examples.

- Rotary motor
- Position scaling
  - Numerator: 1
  - Denominator: 3600
- Modulo range
  - Minimum position: 0 usr_p
  - Maximum position: 3600 usr_p
- Actual position: 700 usr_p

Parameter `MOD_AbsDirection`: Positive Direction

Example 1 Parameter `MOD_AbsMultiRng`: Off

Target positions absolute: 1500 usr_p and 5000 usr_p

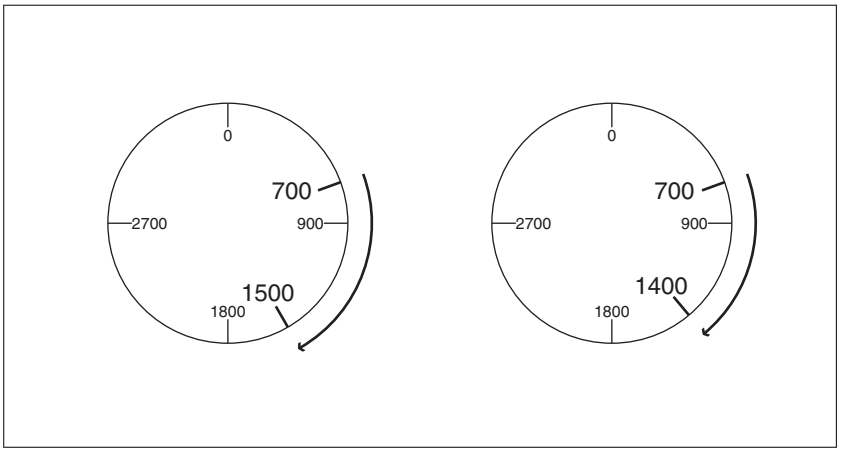

Figure 78: Example 1

Example 2 Parameter `MOD_AbsMultiRng`: On

Target positions absolute: 1500 usr_p and 5000 usr_p

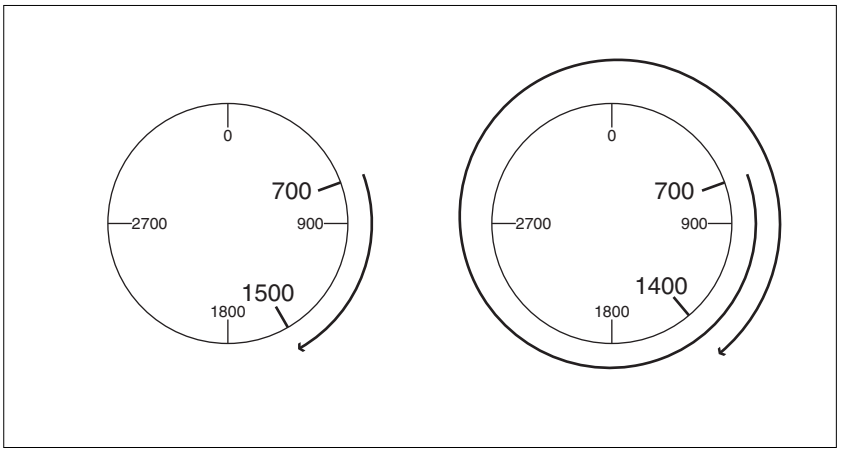

Figure 79: Example 2

0198441113956, V1.00, 07.2013

8.4.3.5 Examples with absolute movements and "Negative Direction"

Assumptions The settings below are assumed for the examples.

- Rotary motor
- Position scaling
  - Numerator: 1
  - Denominator: 3600
- Modulo range
  - Minimum position: 0 usr_p
  - Maximum position: 3600 usr_p
- Actual position: 700 usr_p

Parameter `MOD_AbsDirection`: Negative Direction

Example 1 Parameter `MOD_AbsMultiRng`: Off

Target positions absolute: 1500 usr_p and -5000 usr_p

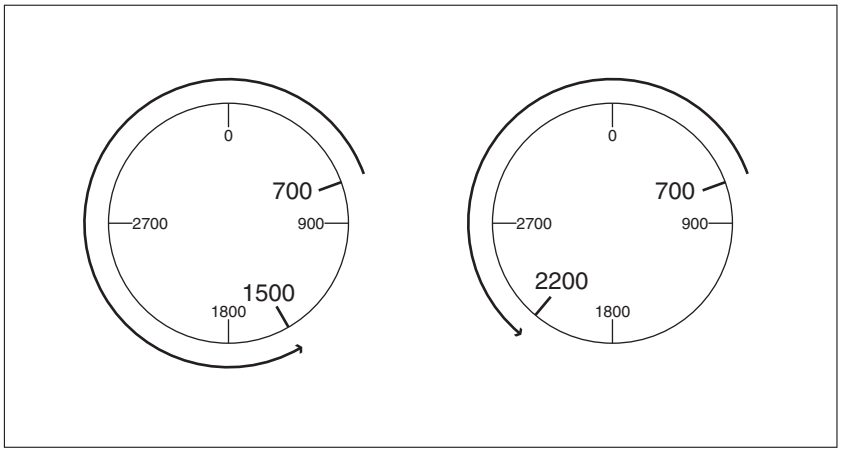

Figure 80: Example 1

Example 2 Parameter `MOD_AbsMultiRng`: On

Target positions absolute: 1500 usr_p and -5000 usr_p

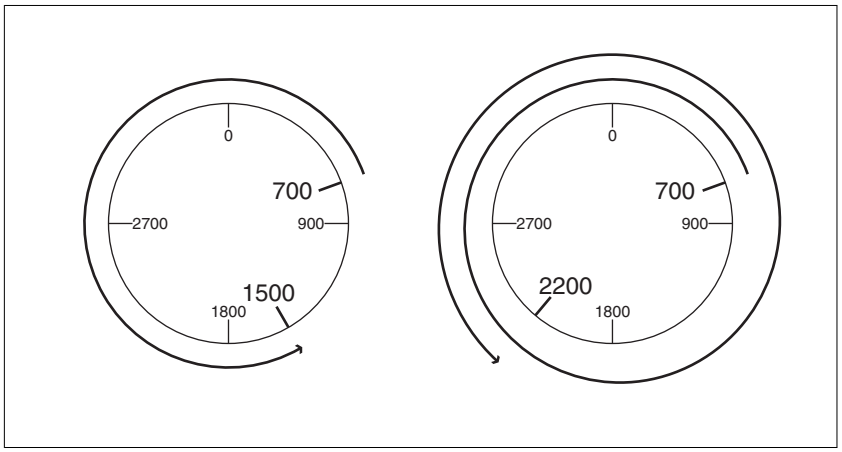

Figure 81: Example 2

0198441113956, V1.00, 07.2013

8.5 Extended settings

8.5.1 Scaling

⚠ WARNING

UNEXPECTED MOVEMENT CAUSED BY CHANGED SCALING

Changing the scaling changes the effect of the values in user-defined units. The same user-defined units cause different movements when the scaling is changed.

- Note that scaling affects all relationships between the user-defined units and the movements.
- Check the parameters with user-defined units.

Failure to follow these instructions can result in death, serious injury or equipment damage.

Scaling converts user-defined units into internal units of the device, and vice versa.

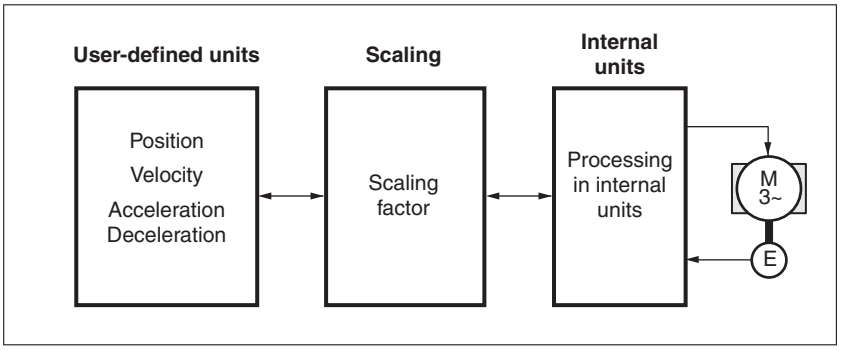

Figure 82: Scaling

User-defined units

User-defined units are values for positions, velocities, acceleration and deceleration; they have the following units:

- usr_p for positions
- usr_v for velocities
- usr_a for acceleration and deceleration

Scaling factor

The scaling factor is the relationship between the motor movement and the required user-defined units. When specifying the scaling factor, note that numerator and denominator can only be integer values.

Commissioning software

You can adjust the scaling via the commissioning software. The parameters with user-defined units are automatically checked and adjusted.

0198441113956, V1.00, 07.2013

8.5.1.1 Configuration of position scaling

Position scaling is the relationship between the number of motor revolutions and the required user-defined units [usr_p].

Scaling factor

Position scaling is specified by means of scaling factor:

In the case of a rotary motor, the scaling factor is calculated as shown below:

$$\frac{\text{Number of revolutions of the motor}}{\text{Number of user-defined units [usr_p]}}$$

Figure 83: Scaling factor of position scaling

A new scaling factor is activated when you specify the numerator value.

With a scaling factor of < 1/131072, it is not possible to perform a movement outside of the movement range.

Factory setting

The following factory settings are used:

- 1 motor revolution corresponds to 16384 user-defined units

Parameter name	Description	Unit Minimum value Factory setting Maximum value	Data type R/W Persistent Expert	Parameter address via field-bus
`ScalePOSnum`	Position scaling: Numerator Specification of the scaling factor: Motor revolutions ---------- User-defined units [usr_p] A new scaling is activated when the numerator value is supplied. Setting can only be changed if power stage is disabled. Changed settings become active immediately.	revolution 1 1 2147483647	INT32 INT32 R/W per. -	CANopen 3006:8h Modbus 1552
`ScalePOSdenom`	Position scaling: Denominator Refer to numerator (ScalePOSnum) for a description. A new scaling is activated when the numerator value is supplied. Setting can only be changed if power stage is disabled.	usr_p 1 16384 2147483647	INT32 INT32 R/W per. -	CANopen 3006:7h Modbus 1550

0198441113956, V1.00, 07.2013

8.5.1.2 Configuration of velocity scaling

Velocity scaling is the relationship between the number of motor revolutions per minute and the required user-defined units [usr_v].

Scaling factor

Velocity scaling is specified by means of scaling factor:

In the case of a rotary motor, the scaling factor is calculated as shown below:

$$\frac{\text{Number of revolutions of the motor per minute}}{\text{Number of user-defined units [usr_v]}}$$

Figure 84: Scaling factor of velocity scaling

Factory setting

The following factory settings are used:

- 1 motor revolution per minute corresponds to 1 user-defined unit

Parameter name	Description	Unit Minimum value Factory setting Maximum value	Data type R/W Persistent Expert	Parameter address via field-bus
`ScaleVELnum`	Velocity scaling: Numerator Specification of the scaling factor: Speed of rotation of motor [min^{-1}] ---------- User-defined units [usr_v] A new scaling is activated when the numerator value is supplied. Setting can only be changed if power stage is disabled. Changed settings become active immediately.	min^{-1} 1 1 2147483647	INT32 INT32 R/W per. -	CANopen 3006:22_h Modbus 1604
`ScaleVELdenom`	Velocity scaling: Denominator Refer to numerator (ScaleVELnum) for a description. A new scaling is activated when the numerator value is supplied. Setting can only be changed if power stage is disabled.	usr_v 1 1 2147483647	INT32 INT32 R/W per. -	CANopen 3006:21_h Modbus 1602

0198441113956, V1.00, 07.2013

8.5.1.3 Configuration of ramp scaling

Ramp scaling is the relationship between the change in velocity and the required user-defined units [usr_a].

Scaling factor

Ramp scaling is specified by means of scaling factor:

$$\frac{\text{Velocity change per second}}{\text{Number of user-defined units [usr_a]}}$$

Figure 85: Scaling factor of ramp scaling

Factory setting

The following factory settings are used:

- A change of 1 motor revolution per minute per second corresponds to 1 user-defined unit.

Parameter name	Description	Unit Minimum value Factory setting Maximum value	Data type R/W Persistent Expert	Parameter address via field-bus
`ScaleRAMPnum`	Ramp scaling: Numerator Setting can only be changed if power stage is disabled. Changed settings become active immediately.	min^{-1}/s 1 1 2147483647	INT32 INT32 R/W per. -	CANopen 3006:31_h Modbus 1634
`ScaleRAMPdenom`	Ramp scaling: Denominator Refer to numerator (ScaleRAMPnum) for a description. A new scaling is activated when the numerator value is supplied. Setting can only be changed if power stage is disabled.	usr_a 1 1 2147483647	INT32 INT32 R/W per. -	CANopen 3006:30_h Modbus 1632

0198441113956, V1.00, 07.2013

8.5.2 Setting the digital signal inputs and signal outputs

Signal function

Different signal functions can be assigned to the digital signal inputs and digital signal outputs.

Debounce time

Signal input debouncing comprises hardware debouncing and software debouncing.

Hardware debounce time is permanently set, see "3.4 Signals". Software debouncing can be adapted via parameters, see chapter "8.5.2.3 Parameterization of software debouncing".

When a set signal function is changed and when the product is switched off and on again, software debouncing is reset to the factory setting.

0198441113956, V1.00, 07.2013

8.5.2.1 Parameterization of the signal input functions

Factory setting

The table below shows the factory settings of the digital signal inputs:

Signal	Signal input function
DI0	Positive Limit Switch (LIMP)
DI1	Negative Limit Switch (LIMN)
DI2	Reference Switch (REF)
DI3	Freely Available

Parameterization

The table below provides an overview of the possible signal input functions:

Signal input function	Description in chapter
Freely Available	No function
Fault Reset	"8.2 Operating states"
Enable	"8.2 Operating states"
Halt	"8.6.1 Stop movement with Halt"
Start Profile Positioning	"8.6.8 Starting a movement via a signal input"
Current Limitation	"8.6.4 Limitation of the current via signal inputs"
Zero Clamp	"8.6.6 Zero Clamp"
Velocity Limitation	"8.6.3 Limitation of the velocity via signal inputs"
Reference Switch (REF)	"8.7.2 Reference switch"
Positive Limit Switch (LIMP)	"8.7.1 Limit switches"
Negative Limit Switch (LIMN)	"8.7.1 Limit switches"
Switch Controller Parameter Set	"8.5.5.5 Parameterizable controller parameters"
Velocity Controller Integral Off	"8.5.5.9 Deactivating the integral term"
Start Signal Of RMAC	"8.6.10 Relative Movement After Capture (RMAC)"
Activate RMAC	"8.6.10 Relative Movement After Capture (RMAC)"
Jog Positive With Enable	"8.2.4 Changing the operating state"
Jog Negative With Enable	"8.2.4 Changing the operating state"
Release Holding Brake	"7.5.6.1 Releasing the holding brake manually"

The following parameters can be used to parameterize the digital signal inputs:

0198441113956, V1.00, 07.2013

Parameter name	Description	Unit Minimum value Factory setting Maximum value	Data type R/W Persistent Expert	Parameter address via field-bus
IOfunct_DI0	Function Input DI0 **1 / Freely Available**: Available as required **2 / Fault Reset**: Fault reset after error **3 / Enable**: Enables the power stage **4 / Halt**: Halt **5 / Start Profile Positioning**: Start request for movement **6 / Current Limitation**: Limits the current to parameter value **7 / Zero Clamp**: Zero clamping **8 / Velocity Limitation**: Limits the velocity to parameter value **21 / Reference Switch (REF)**: Reference switch **22 / Positive Limit Switch (LIMP)**: Positive limit switch **23 / Negative Limit Switch (LIMN)**: Negative limit switch **24 / Switch Controller Parameter Set**: Switches controller parameter set **28 / Velocity Controller Integral Off**: Switches off velocity controller integral term **30 / Start Signal Of RMAC**: Start signal of relative movement after capture (RMAC) **31 / Activate RMAC**: Activates the relative movement after capture (RMAC) **33 / Jog Positive With Enable**: Jog: Enables power stage and moves in positive direction **34 / Jog Negative With Enable**: Jog: Enables power stage and moves in negative direction **40 / Release Holding Brake**: Releases the holding brake Setting can only be changed if power stage is disabled. Changed settings become active the next time the product is switched on.	- - - -	UINT16 UINT16 R/W per. -	CANopen 3007:1$_h$ Modbus 1794

0198441113956, V1.00, 07.2013

Parameter name	Description	Unit Minimum value Factory setting Maximum value	Data type R/W Persistent Expert	Parameter address via field-bus
IOfunct_DI1	Function Input DI1 **1 / Freely Available**: Available as required **2 / Fault Reset**: Fault reset after error **3 / Enable**: Enables the power stage **4 / Halt**: Halt **5 / Start Profile Positioning**: Start request for movement **6 / Current Limitation**: Limits the current to parameter value **7 / Zero Clamp**: Zero clamping **8 / Velocity Limitation**: Limits the velocity to parameter value **21 / Reference Switch (REF)**: Reference switch **22 / Positive Limit Switch (LIMP)**: Positive limit switch **23 / Negative Limit Switch (LIMN)**: Negative limit switch **24 / Switch Controller Parameter Set**: Switches controller parameter set **28 / Velocity Controller Integral Off**: Switches off velocity controller integral term **30 / Start Signal Of RMAC**: Start signal of relative movement after capture (RMAC) **31 / Activate RMAC**: Activates the relative movement after capture (RMAC) **33 / Jog Positive With Enable**: Jog: Enables power stage and moves in positive direction **34 / Jog Negative With Enable**: Jog: Enables power stage and moves in negative direction **40 / Release Holding Brake**: Releases the holding brake Setting can only be changed if power stage is disabled. Changed settings become active the next time the product is switched on.	- - - -	UINT16 UINT16 R/W per. -	CANopen 3007:2$_h$ Modbus 1796

0198441113956, V1.00, 07.2013

Parameter name	Description	Unit Minimum value Factory setting Maximum value	Data type R/W Persistent Expert	Parameter address via field-bus
IOfunct_DI2	Function Input DI2 **1 / Freely Available**: Available as required **2 / Fault Reset**: Fault reset after error **3 / Enable**: Enables the power stage **4 / Halt**: Halt **5 / Start Profile Positioning**: Start request for movement **6 / Current Limitation**: Limits the current to parameter value **7 / Zero Clamp**: Zero clamping **8 / Velocity Limitation**: Limits the velocity to parameter value **21 / Reference Switch (REF)**: Reference switch **22 / Positive Limit Switch (LIMP)**: Positive limit switch **23 / Negative Limit Switch (LIMN)**: Negative limit switch **24 / Switch Controller Parameter Set**: Switches controller parameter set **28 / Velocity Controller Integral Off**: Switches off velocity controller integral term **30 / Start Signal Of RMAC**: Start signal of relative movement after capture (RMAC) **31 / Activate RMAC**: Activates the relative movement after capture (RMAC) **33 / Jog Positive With Enable**: Jog: Enables power stage and moves in positive direction **34 / Jog Negative With Enable**: Jog: Enables power stage and moves in negative direction **40 / Release Holding Brake**: Releases the holding brake Setting can only be changed if power stage is disabled. Changed settings become active the next time the product is switched on.	- - - -	UINT16 UINT16 R/W per. -	CANopen 3007:3$_h$ Modbus 1798

0198441113956, V1.00, 07.2013

Parameter name	Description	Unit Minimum value Factory setting Maximum value	Data type R/W Persistent Expert	Parameter address via field-bus
IOfunct_DI3	Function Input DI3 **1 / Freely Available**: Available as required **2 / Fault Reset**: Fault reset after error **3 / Enable**: Enables the power stage **4 / Halt**: Halt **5 / Start Profile Positioning**: Start request for movement **6 / Current Limitation**: Limits the current to parameter value **7 / Zero Clamp**: Zero clamping **8 / Velocity Limitation**: Limits the velocity to parameter value **21 / Reference Switch (REF)**: Reference switch **22 / Positive Limit Switch (LIMP)**: Positive limit switch **23 / Negative Limit Switch (LIMN)**: Negative limit switch **24 / Switch Controller Parameter Set**: Switches controller parameter set **28 / Velocity Controller Integral Off**: Switches off velocity controller integral term **30 / Start Signal Of RMAC**: Start signal of relative movement after capture (RMAC) **31 / Activate RMAC**: Activates the relative movement after capture (RMAC) **33 / Jog Positive With Enable**: Jog: Enables power stage and moves in positive direction **34 / Jog Negative With Enable**: Jog: Enables power stage and moves in negative direction **40 / Release Holding Brake**: Releases the holding brake Setting can only be changed if power stage is disabled. Changed settings become active the next time the product is switched on.	- - - -	UINT16 UINT16 R/W per. -	CANopen 3007:4$_h$ Modbus 1800

0198441113956, V1.00, 07.2013

8.5.2.2 Parameterization of the signal output functions

Factory setting

The table below shows the factory settings of the digital signal outputs:

Signal	Signal output function
DQ0	No Fault
DQ1	Active

Parameterization

The table below provides an overview of the possible signal output functions depending:

Signal output function	Description in chapter
Freely Available	"8.6.7 Setting a signal output via parameter"
No Fault	"8.2.3 Indication of the operating state"
Active	"8.2.3 Indication of the operating state"
RMAC Active Or Finished	"8.6.10 Relative Movement After Capture (RMAC)"
In Position Deviation Window	"8.7.10 Position deviation window"
In Velocity Deviation Window	"8.7.11 Velocity deviation window"
Velocity Below Threshold	"8.7.12 Velocity threshold value"
Current Below Threshold	"8.7.13 Current threshold value"
Halt Acknowledge	"8.6.1 Stop movement with Halt"
Motor Standstill	"8.7.5 Motor standstill and direction of movement"
Selected Error	"10.2 Diagnostics via signal outputs"
Drive Referenced (ref_ok)	"8.3.6 Operating mode Homing"
Selected Warning	"10.2 Diagnostics via signal outputs"
Position Register Channel 1	"8.7.9 Position register"
Position Register Channel 2	"8.7.9 Position register"
Position Register Channel 3	"8.7.9 Position register"
Position Register Channel 4	"8.7.9 Position register"
Motor Moves Positive	"8.7.5 Motor standstill and direction of movement"
Motor Moves Negative	"8.7.5 Motor standstill and direction of movement"

The following parameters can be used to parameterize the digital signal outputs:

0198441113956, V1.00, 07.2013

Parameter name	Description	Unit Minimum value Factory setting Maximum value	Data type R/W Persistent Expert	Parameter address via field-bus
`IOfunct_DQ0`	Function Output DQ0 **1 / Freely Available**: Available as required **2 / No Fault**: Signals operating states Ready To Switch On, Switched On and Operation Enabled **3 / Active**: Signals operating state Operation Enabled **4 / RMAC Active Or Finished**: Relative movement after capture active or finished (RMAC) **5 / In Position Deviation Window**: Position deviation is within window **6 / In Velocity Deviation Window**: Velocity deviation is within window **7 / Velocity Below Threshold**: Motor velocity below threshold **8 / Current Below Threshold**: Motor current below threshold **9 / Halt Acknowledge**: Halt acknowledgement **13 / Motor Standstill**: Motor at a standstill **14 / Selected Error**: One of the selected errors is active **15 / Valid Reference (ref_ok)**: Drive has a valid reference (ref_ok) **16 / Selected Warning**: One of the selected warnings is active **18 / Position Register Channel 1**: Position register channel 1 **19 / Position Register Channel 2**: Position register channel 2 **20 / Position Register Channel 3**: Position register channel 3 **21 / Position Register Channel 4**: Position register channel 4 **22 / Motor Moves Positive**: Motor moves in positive direction **23 / Motor Moves Negative**: Motor moves in negative direction Setting can only be changed if power stage is disabled. Changed settings become active the next time the product is switched on.	- - - -	UINT16 UINT16 R/W per. -	CANopen 3007:9$_h$ Modbus 1810

0198441113956, V1.00, 07.2013

Parameter name	Description	Unit Minimum value Factory setting Maximum value	Data type R/W Persistent Expert	Parameter address via field-bus
IOfunct_DQ1	Function Output DQ1 **1 / Freely Available**: Available as required **2 / No Fault**: Signals operating states Ready To Switch On, Switched On and Operation Enabled **3 / Active**: Signals operating state Operation Enabled **4 / RMAC Active Or Finished**: Relative movement after capture active or finished (RMAC) **5 / In Position Deviation Window**: Position deviation is within window **6 / In Velocity Deviation Window**: Velocity deviation is within window **7 / Velocity Below Threshold**: Motor velocity below threshold **8 / Current Below Threshold**: Motor current below threshold **9 / Halt Acknowledge**: Halt acknowledgement **13 / Motor Standstill**: Motor at a standstill **14 / Selected Error**: One of the selected errors is active **15 / Valid Reference (ref_ok)**: Drive has a valid reference (ref_ok) **16 / Selected Warning**: One of the selected warnings is active **18 / Position Register Channel 1**: Position register channel 1 **19 / Position Register Channel 2**: Position register channel 2 **20 / Position Register Channel 3**: Position register channel 3 **21 / Position Register Channel 4**: Position register channel 4 **22 / Motor Moves Positive**: Motor moves in positive direction **23 / Motor Moves Negative**: Motor moves in negative direction Setting can only be changed if power stage is disabled. Changed settings become active the next time the product is switched on.	- - - -	UINT16 UINT16 R/W per. -	CANopen 3007:A_h Modbus 1812

0198441113956, V1.00, 07.2013

8.5.2.3 Parameterization of software debouncing

The debounce time can be set via the following parameters.

Parameter name	Description	Unit Minimum value Factory setting Maximum value	Data type R/W Persistent Expert	Parameter address via field-bus
DI_0_Debounce	Debounce time of DI0 **0 / No**: No software debouncing **1 / 0.25 ms**: 0.25 ms **2 / 0.50 ms**: 0.50 ms **3 / 0.75 ms**: 0.75 ms **4 / 1.00 ms**: 1.00 ms **5 / 1.25 ms**: 1.25 ms **6 / 1.50 ms**: 1.50 ms Setting can only be changed if power stage is disabled. Changed settings become active immediately.	- 0 6 6	UINT16 UINT16 R/W per. -	CANopen 3008:20h Modbus 2112
DI_1_Debounce	Debounce time of DI1 **0 / No**: No software debouncing **1 / 0.25 ms**: 0.25 ms **2 / 0.50 ms**: 0.50 ms **3 / 0.75 ms**: 0.75 ms **4 / 1.00 ms**: 1.00 ms **5 / 1.25 ms**: 1.25 ms **6 / 1.50 ms**: 1.50 ms Setting can only be changed if power stage is disabled. Changed settings become active immediately.	- 0 6 6	UINT16 UINT16 R/W per. -	CANopen 3008:21h Modbus 2114
DI_2_Debounce	Debounce time of DI2 **0 / No**: No software debouncing **1 / 0.25 ms**: 0.25 ms **2 / 0.50 ms**: 0.50 ms **3 / 0.75 ms**: 0.75 ms **4 / 1.00 ms**: 1.00 ms **5 / 1.25 ms**: 1.25 ms **6 / 1.50 ms**: 1.50 ms Setting can only be changed if power stage is disabled. Changed settings become active immediately.	- 0 6 6	UINT16 UINT16 R/W per. -	CANopen 3008:22h Modbus 2116
DI_3_Debounce	Debounce time of DI3 **0 / No**: No software debouncing **1 / 0.25 ms**: 0.25 ms **2 / 0.50 ms**: 0.50 ms **3 / 0.75 ms**: 0.75 ms **4 / 1.00 ms**: 1.00 ms **5 / 1.25 ms**: 1.25 ms **6 / 1.50 ms**: 1.50 ms Setting can only be changed if power stage is disabled. Changed settings become active immediately.	- 0 6 6	UINT16 UINT16 R/W per. -	CANopen 3008:23h Modbus 2118

0198441113956, V1.00, 07.2013

8.5.3 Setting backlash compensation

By setting backlash compensation, you can compensate for mechanical backlash.

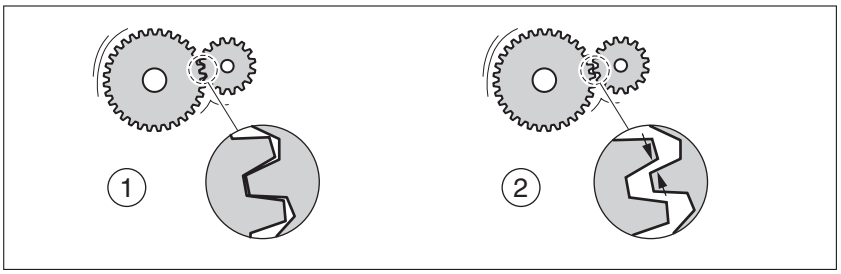

Figure 86: Example of mechanical backlash

(1) Example of low mechanical backlash
(2) Example of high mechanical backlash

When backlash compensation is activated, the drive automatically compensates for the mechanical backlash during each movement.

Availability

Backlash compensation is possible in the following operating modes:

- Jog
- Profile Position
- Homing

Parameterization

To use backlash compensation, you must set the amount of backlash.

The parameter `BLSH_Position` lets you set the amount of backlash in user-defined units.

Parameter name	Description	Unit Minimum value Factory setting Maximum value	Data type R/W Persistent Expert	Parameter address via field-bus
`BLSH_Position`	Position value for backlash compensation Setting can only be changed if power stage is disabled. Changed settings become active the next time the power stage is enabled.	usr_p 0 0 2147483647	INT32 INT32 R/W per. -	CANopen 3006:42$_h$ Modbus 1668

In addition, you can set a processing time. The processing time specifies the period of time during which the mechanical backlash is to be compensated for.

The parameter `BLSH_Time` lets you set the processing time in ms.

0198441113956, V1.00, 07.2013

Parameter name	Description	Unit Minimum value Factory setting Maximum value	Data type R/W Persistent Expert	Parameter address via field-bus
BLSH_Time	Processing time for backlash compensation Value 0: Immediate backlash compensation Value >0: Processing time for backlash compensation Setting can only be changed if power stage is disabled. Changed settings become active the next time the power stage is enabled.	ms 0 0 16383	UINT16 UINT16 R/W per. -	CANopen 3006:44h Modbus 1672

Activating backlash compensation

Before you can activate backlash compensation, there must be a movement in positive or negative direction. Backlash compensation is activated with the parameter BLSH_Mode.

- Start a movement in positive direction or in negative direction. This movement must last as long as it takes to move the mechanical system connected to the motor.
- If the movement was in positive direction (positive target values), activate backlash compensation with the value "OnAfterPositive-Movement".
- If the movement was in negative direction (negative target values), activate backlash compensation with the value "OnAfterNegative-Movement".

Parameter name	Description	Unit Minimum value Factory setting Maximum value	Data type R/W Persistent Expert	Parameter address via field-bus
BLSH_Mode	Processing mode of backlash compensation **0 / Off**: Backlash compensation is off **1 / OnAfterPositiveMovement**: Backlash compensation is on, last movement was in positive direction **2 / OnAfterNegativeMovement**: Backlash compensation is on, last movement was in negative direction Changed settings become active immediately.	- 0 0 2	UINT16 UINT16 R/W per. -	CANopen 3006:41h Modbus 1666

0198441113956, V1.00, 07.2013

8.5.4 Setting the motion profile for the velocity

Target position and target velocity are input values specified by the user. A motion profile for the velocity is calculated on the basis of these input values.

The motion profile for the velocity consists of an acceleration, a deceleration and a maximum velocity.

A linear ramp for both directions of movement is available.

Availability

The availability of the motion profile for the velocity depends on the operating mode.

In the following operating modes, the motion profile for the velocity is permanently active:

- Jog
- Profile Position
- Homing

In the following operating modes, the motion profile for the velocity can be activated and deactivated:

- Profile Velocity

In the following operating modes, the motion profile for the velocity is unavailable:

- Profile Torque

Ramp slope

The ramp slope determines the velocity changes of the motor per time unit. The ramp slope can be set for acceleration and deceleration.

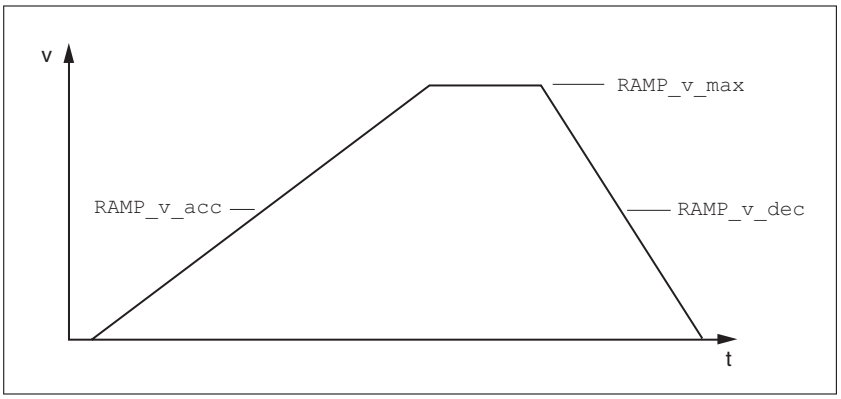

Figure 87: Ramp slope

0198441113956, V1.00, 07.2013

Parameter name	Description	Unit Minimum value Factory setting Maximum value	Data type R/W Persistent Expert	Parameter address via field-bus
RAMP_v_enable	Activation of the motion profile for velocity **0 / Profile Off**: Profile off **1 / Profile On**: Profile on Setting can only be changed if power stage is disabled. Changed settings become active immediately.	- 0 1 1	UINT16 UINT16 R/W per. -	CANopen 3006:2B$_h$ Modbus 1622
RAMP_v_max	Maximum velocity of the motion profile for velocity If a greater reference speed is set in one of these operating modes, it is automatically limited to RAMP_v_max. This way, commissioning at limited speed is easier to perform. Setting can only be changed if power stage is disabled. Changed settings become active the next time the motor moves.	usr_v 1 13200 2147483647	UINT32 UINT32 R/W per. -	CANopen 607F:0$_h$ Modbus 1554
RAMP_v_acc	Acceleration of the motion profile for velocity Writing the value 0 has no effect on the parameter. Changed settings become active the next time the motor moves.	usr_a 1 600 2147483647	UINT32 UINT32 R/W per. -	CANopen 6083:0$_h$ Modbus 1556
RAMP_v_dec	Deceleration of the motion profile for velocity The minimum value depends on the operating mode: Operating modes with minimum value 1: Profile Velocity Operating modes with minimum value 120: Jog Profile Position Homing Writing the value 0 has no effect on the parameter. Changed settings become active the next time the motor moves.	usr_a 1 600 2147483647	UINT32 UINT32 R/W per. -	CANopen 6084:0$_h$ Modbus 1558

0198441113956, V1.00, 07.2013

8.5.5 Setting the controller parameters

8.5.5.1 Overview of the controller structure

The illustration below provides an overview of the controller structure.

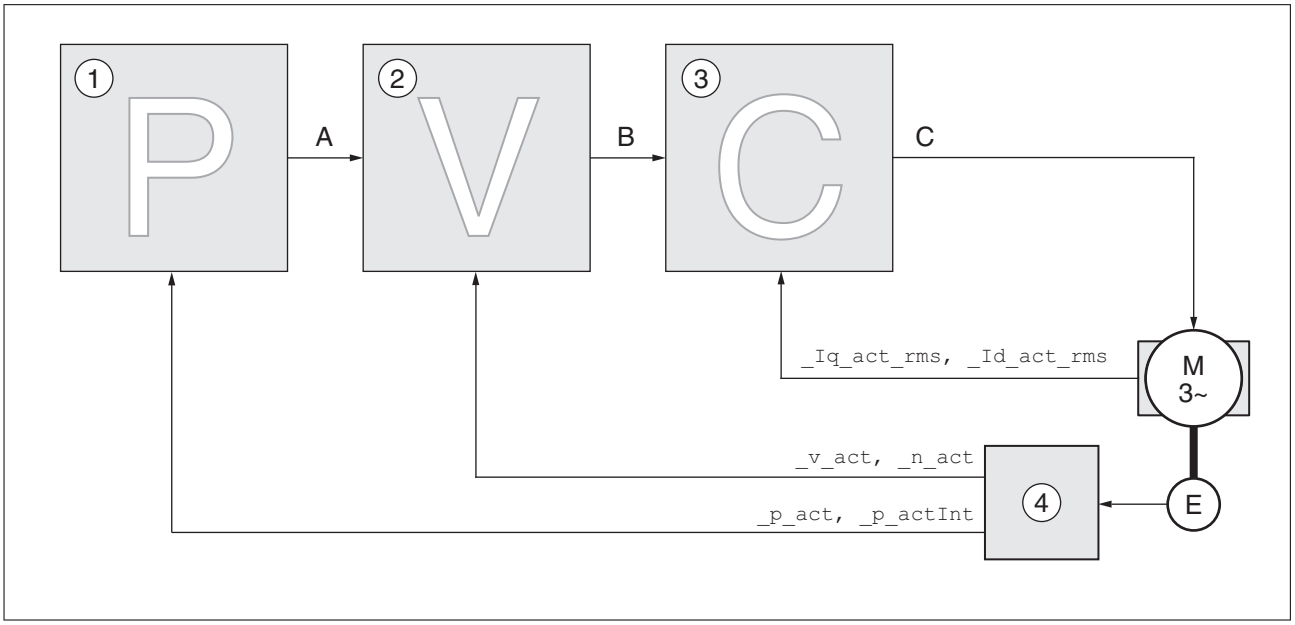

Figure 88: Controller structure, overview

(1) Position controller
(2) Velocity controller
(3) Current controller
(4) Encoder evaluation

Position controller

The position controller reduces the difference between the reference position and the actual position of the motor (position deviation) to a minimum. When the motor is at a standstill, the position deviation is close to zero in the case of a well-tuned position controller.

An optimized velocity control loop is a prerequisite for good amplification of the position controller.

Velocity controller

The velocity controller controls the motor velocity by varying the motor current depending on the load situation. The velocity controller has a decisive influence on the dynamic response of the drive. The dynamics of the velocity controller depend on:

- Moment of inertia of the drive and the controlled system
- Power of the motor
- Stiffness and elasticity of the elements in the flow of forces
- Backlash of the drive elements
- Friction

Current controller

The current controller determines the torque of the motor. The current controller is automatically optimally tuned with the stored motor data.

0198441113956, V1.00, 07.2013

8.5.5.2 Overview of position controller

The illustration below provides an overview of the position controller.

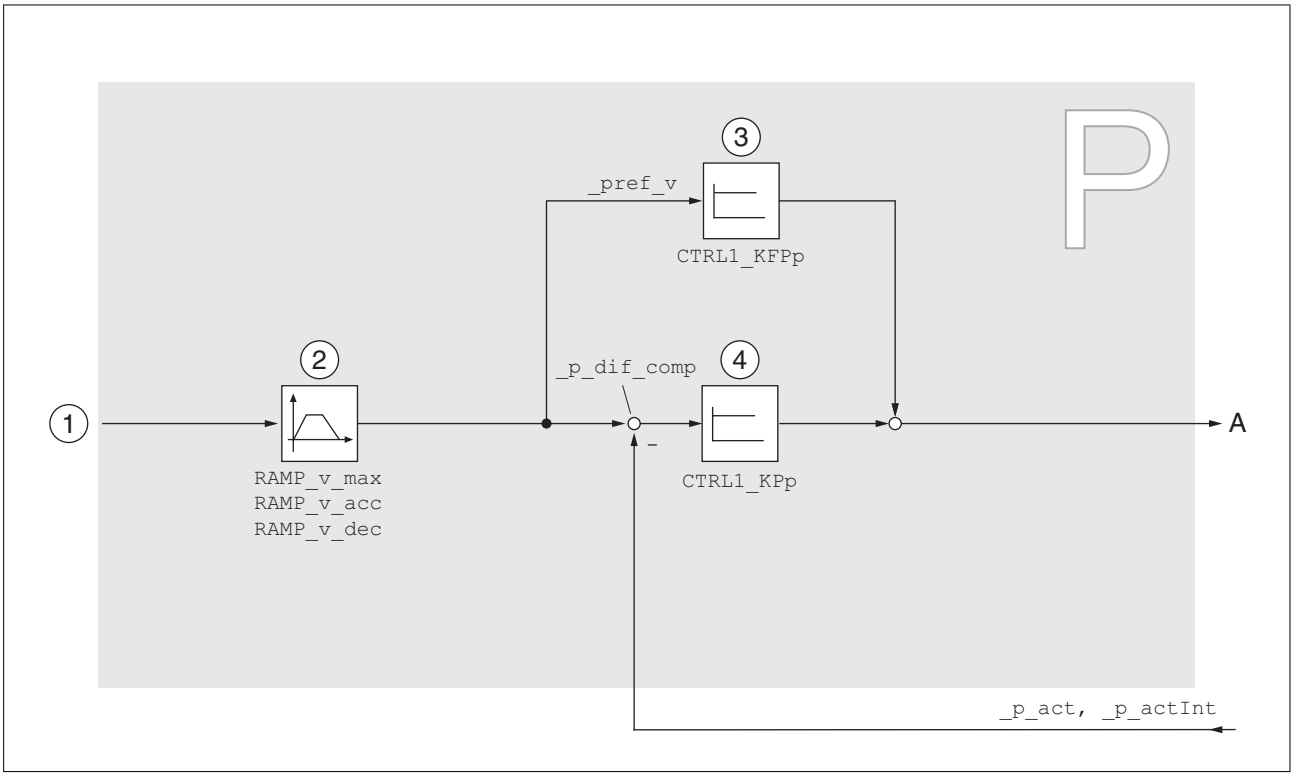

Figure 89: Position controller

(1) Target values for the operating modes Jog, Profile Position and Homing

(2) Motion profile for the velocity

(3) Velocity feed-forward control

(4) Position controller

Sampling period The sampling period of the position controller is 250 µs.

0198441113956, V1.00, 07.2013

8.5.5.3 Overview of velocity controller

The illustration below provides an overview of the velocity controller.

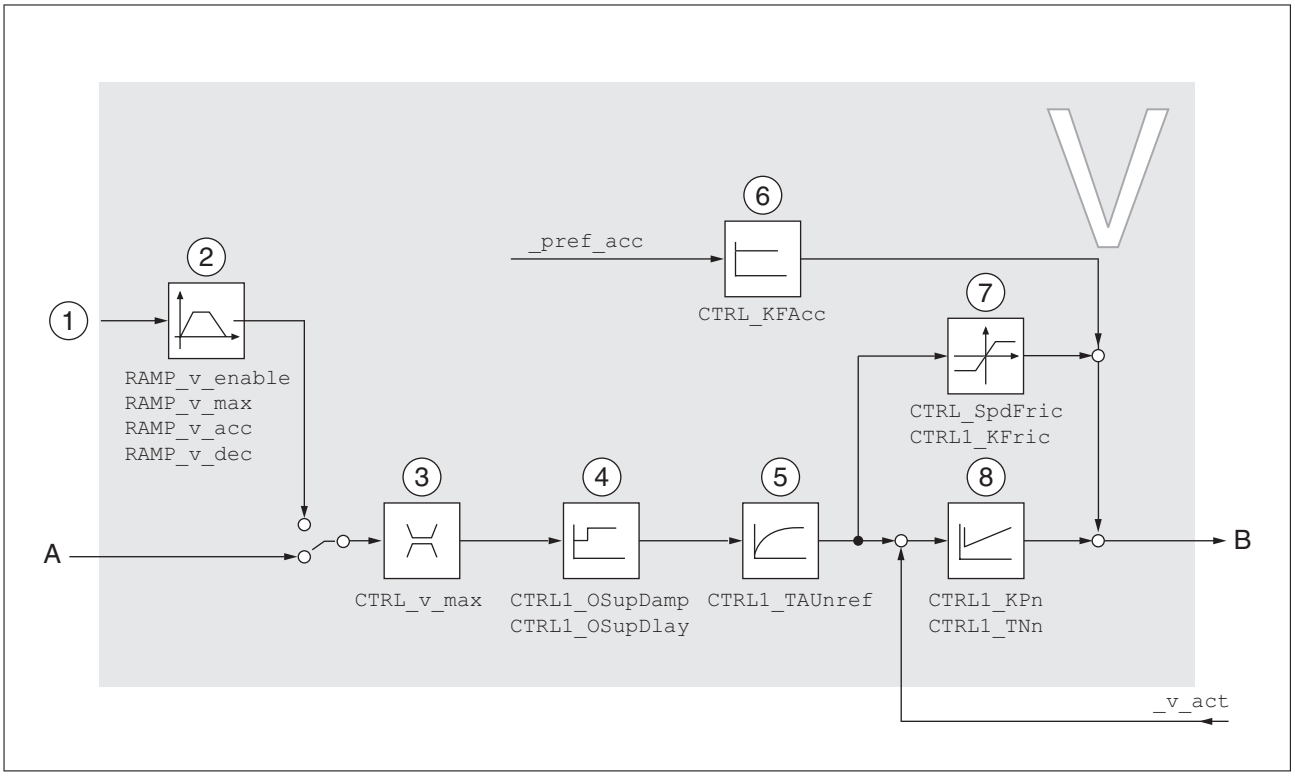

Figure 90: Velocity controller

(1) Target values for the operating mode Profile Velocity

(2) Motion profile for the velocity

(3) Velocity limitation

(4) Overshoot suppression filter (parameter accessible in Expert mode)

(5) Filter time constant of the reference velocity value filter

(6) Acceleration feed forward control (parameter accessible in Expert mode)

(7) Friction compensation (parameter accessible in Expert mode)

(8) Velocity controller

Sampling period The sampling period of the velocity controller is 62.5 µs.

0198441113956, V1.00, 07.2013

8.5.5.4 Overview of current controller

The illustration below provides an overview of the current controller.

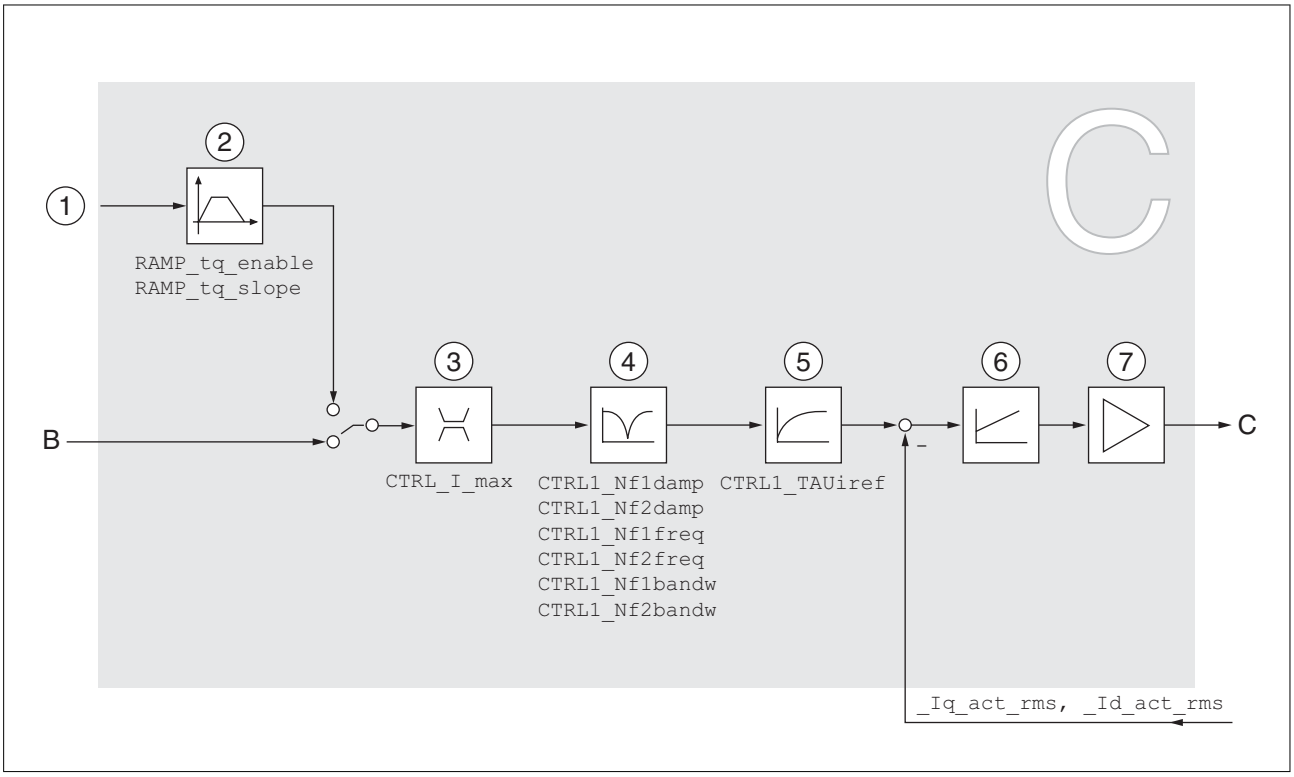

Figure 91: Current controller

(1) Target values for the operating mode Profile Torque
(2) Motion profile for the torque
(3) Current limitation
(4) Notch filter (parameter accessible in Expert mode)
(5) Filter time constant of the reference current value filter
(6) Current controller
(7) Power stage

Sampling period The sampling period of the current controller is 62.5 µs.

0198441113956, V1.00, 07.2013

8.5.5.5 Parameterizable controller parameters

The product features 2 controller parameter sets that can be parameterized separately. The values for the controller parameters determined during autotuning are stored in controller parameter set 1.

Controller parameter set

A controller parameter set consists of freely accessible parameters and parameters which are only accessible in Expert mode.

Controller parameter set 1	Controller parameter set 2
Freely accessible parameters:	Freely accessible parameters:
CTRL1_KPn CTRL1_TNn CTRL1_KPp CTRL1_TAUiref CTRL1_TAUnref CTRL1_KFPp	CTRL2_KPn CTRL2_TNn CTRL2_KPp CTRL2_TAUiref CTRL2_TAUnref CTRL2_KFPp
Parameters only accessible in expert mode:	Parameters only accessible in expert mode:
CTRL1_Nf1damp CTRL1_Nf1freq CTRL1_Nf1bandw CTRL1_Nf2damp CTRL1_Nf2freq CTRL1_Nf2bandw CTRL1_Osupdamp CTRL1_Osupdelay CTRL1_Kfric	CTRL2_Nf1damp CTRL2_Nf1freq CTRL2_Nf1bandw CTRL2_Nf2damp CTRL2_Nf2freq CTRL2_Nf2bandw CTRL2_Osupdamp CTRL2_Osupdelay CTRL2_Kfric

See chapters "8.5.5.10 Controller parameter set 1" and "8.5.5.11 Controller parameter set 2".

Parameterization

- Selecting a controller parameter set

  Select a controller parameter set after switching on.

  See chapter "8.5.5.6 Selecting a controller parameter set".
- Automatically switching between control parameter sets

  It is possible to switch between the two controller parameter sets.

  See chapter "8.5.5.7 Automatically switching between control parameter sets".
- Copying a controller parameter set

  The values of controller parameter set 1 can be copied to controller parameter set 2.

  See chapter "8.5.5.8 Copying a controller parameter set".
- Deactivating the integral term

  The integral term and, by implication, the integral action time, can be switched off via a digital signal input.

  See chapter "8.5.5.9 Deactivating the integral term".

0198441113956, V1.00, 07.2013

8.5.5.6 Selecting a controller parameter set

The currently active controller parameter set is indicated via the parameter `_CTRL_ActParSet`.

The parameter `CTRL_PwrUpParSet` allows you to set the controller parameter set to be activated after switching on. Alternatively, you can set whether or not the product is to switch automatically between the two controller parameter sets.

The parameter `CTRL_SelParSet` allows you to switch between the two controller parameter sets during operation.

Parameter name	Description	Unit Minimum value Factory setting Maximum value	Data type R/W Persistent Expert	Parameter address via field-bus
`_CTRL_ActParSet`	Active controller parameter set Value 1: Controller parameter set 1 is active Value 2: Controller parameter set 2 is active A controller parameter set is active after the time for the parameter switching (CTRL_ParChgTime) has elapsed.	- - - -	UINT16 UINT16 R/- - -	CANopen 3011:17$_h$ Modbus 4398
`CTRL_PwrUpParSet`	Selection of controller parameter set at power up **0 / Switching Condition**: The switching condition is used for parameter set switching **1 / Parameter Set 1**: Parameter set 1 is used **2 / Parameter Set 2**: Parameter set 2 is used The selected value is also written to CTRL_ParSetSel (non-persistent). Changed settings become active immediately.	- 0 1 2	UINT16 UINT16 R/W per. -	CANopen 3011:18$_h$ Modbus 4400
`CTRL_SelParSet`	Selection of controller parameter set (non-persistent) Coding see parameter: CTRL_PwrUpParSet Changed settings become active immediately.	- 0 1 2	UINT16 UINT16 R/W - -	CANopen 3011:19$_h$ Modbus 4402

0198441113956, V1.00, 07.2013

8.5.5.7 Automatically switching between control parameter sets

It is possible to automatically switch between the two controller parameter sets.

The following criteria can be set for switching between the controller parameter sets:

- Digital signal input
- Position deviation window
- Target velocity below parameterizable value
- Actual velocity below parameterizable value

Settings The illustration below provides an overview of switching between the controller parameter sets.

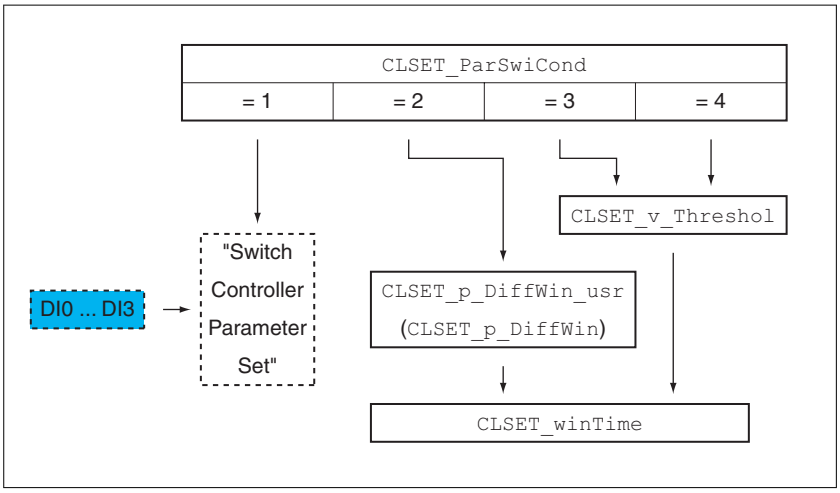

Figure 92: Parameters for switching the controller parameter sets

0198441113956, V1.00, 07.2013

Time chart

The freely accessible parameters are changed linearly. This linear change of the values of controller parameter set 1 to the values of controller parameter set 2 takes place during the parameterizable time `CTRL_ParChgTime`.

The parameters only accessible in Expert mode are directly changed to the values of the other controller parameter set after the parameterizable time `CTRL_ParChgTime` has passed.

The figure below shows the time chart for switching the controller parameters.

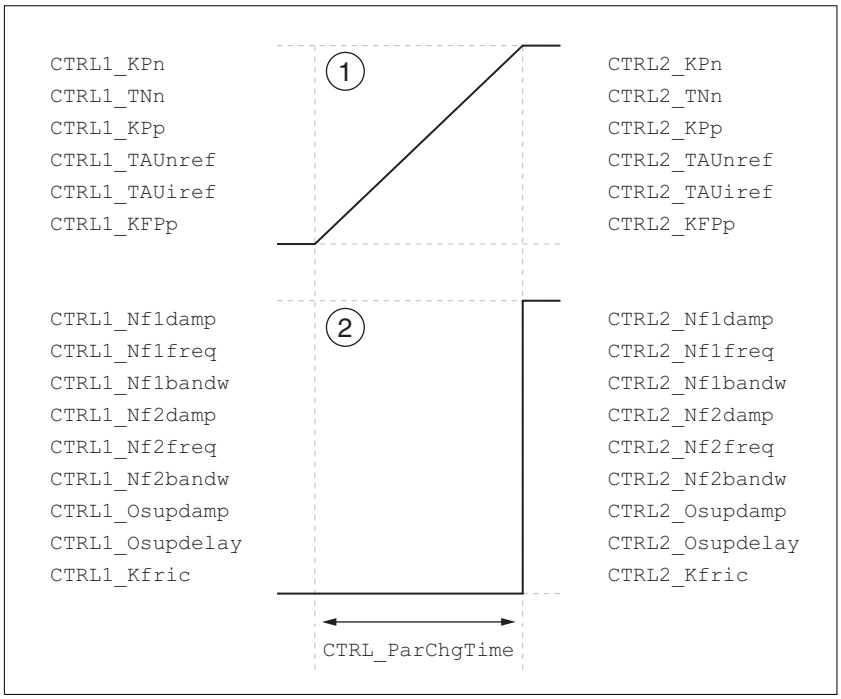

Figure 93: Time chart for switching the controller parameter sets

(1) Freely accessible parameters are changed linearly over time

(2) Parameters which are only accessible in Expert mode are switched over directly

0198441113956, V1.00, 07.2013

Parameter name	Description	Unit Minimum value Factory setting Maximum value	Data type R/W Persistent Expert	Parameter address via field-bus
CLSET_ParSwiCond	Condition for parameter set switching **0 / None Or Digital Input**: None or digital input function selected **1 / Inside Position Deviation**: Inside position deviation (value definition in parameter CLSET_p_DiffWin) **2 / Below Reference Velocity**: Below reference velocity (value definition in parameter CLSET_v_Threshol) **3 / Below Actual Velocity**: Below actual velocity (value definition in parameter CLSET_v_Threshol) **4 / Reserved**: Reserved In the case of parameter set switching, the values of the following parameters are changed gradually: - CTRL_KPn - CTRL_TNn - CTRL_KPp - CTRL_TAUnref - CTRL_TAUiref - CTRL_KFPp The following parameters are changed immediately after the time for parameter set switching (CTRL_ParChgTime): - CTRL_Nf1damp - CTRL_Nf1freq - CTRL_Nf1bandw - CTRL_Nf2damp - CTRL_Nf2freq - CTRL_Nf2bandw - CTRL_Osupdamp - CTRL_Osupdelay - CTRL_Kfric Changed settings become active immediately.	- 0 0 4	UINT16 UINT16 R/W per. -	CANopen 3011:1A$_h$ Modbus 4404
CLSET_p_DiffWin_usr	Position deviation for parameter set switching If the position deviation of the position controller is less than the value of this parameter, the controller parameter set 2 is used. Otherwise, controller parameter set 1 is used. The minimum value, the factory setting and the maximum value depend on the scaling factor. Changed settings become active immediately.	usr_p 0 164 2147483647	INT32 INT32 R/W per. -	CANopen 3011:25$_h$ Modbus 4426

0198441113956, V1.00, 07.2013

Parameter name	Description	Unit Minimum value Factory setting Maximum value	Data type R/W Persistent Expert	Parameter address via field-bus
CLSET_p_DiffWin	Position deviation for parameter set switching If the position deviation of the position controller is less than the value of this parameter, the controller parameter set 2 is used. Otherwise, controller parameter set 1 is used. The parameter CLSET_p_DiffWin_usr allows you to enter the value in user-defined units. In increments of 0.0001 revolution. Changed settings become active immediately.	revolution 0.0000 0.0100 2.0000	UINT16 UINT16 R/W per. -	CANopen 3011:1C$_h$ Modbus 4408
CLSET_v_Threshol	Velocity threshold for parameter set switching If the reference velocity or the actual velocity are less than the value of this parameter, the controller parameter set 2 is used. Otherwise, controller parameter set 1 is used. Changed settings become active immediately.	usr_v 0 50 2147483647	UINT32 UINT32 R/W per. -	CANopen 3011:1D$_h$ Modbus 4410
CLSET_winTime	Time window for parameter set switching Value 0: Window monitoring deactivated. Value >0: Window time for the parameters CLSET_v_Threshol and CLSET_p_DiffWin. Changed settings become active immediately.	ms 0 0 1000	UINT16 UINT16 R/W per. -	CANopen 3011:1B$_h$ Modbus 4406
CTRL_ParChgTime	Period of time for parameter switching In the case of parameter set switching, the values of the following parameters are changed gradually: - CTRL_KPn - CTRL_TNn - CTRL_KPp - CTRL_TAUnref - CTRL_TAUiref - CTRL_KFPp Such a parameter switching can be caused by - change of the active controller parameter set - change of the global gain - change of any of the parameters listed above - switching off the integral term of the velocity controller Changed settings become active immediately.	ms 0 0 2000	UINT16 UINT16 R/W per. -	CANopen 3011:14$_h$ Modbus 4392

0198441113956, V1.00, 07.2013

8.5.5.8 Copying a controller parameter set

The parameter `CTRL_ParSetCopy` allows you to copy the values of controller parameter set 1 to controller parameter set 2 or the values of controller parameter set 2 to controller parameter set 1.

Parameter name	Description	Unit Minimum value Factory setting Maximum value	Data type R/W Persistent Expert	Parameter address via field-bus
`CTRL_ParSetCopy`	Controller parameter set copying Value 1: Copy controller parameter set 1 to set 2 Value 2: Copy controller parameter set 2 to set 1 If parameter set 2 copied to parameter set 1, the parameter CTRL_GlobGain is set to 100%. Changed settings become active immediately.	- 0.0 - 0.2	UINT16 UINT16 R/W - -	CANopen 3011:16$_h$ Modbus 4396

8.5.5.9 Deactivating the integral term

The integral term of the velocity controller can be deactivated via the signal input function "Velocity Controller Integral Off". If the integral term is deactivated, the integral action time of the velocity controller (`CTRL1_TNn` and `CTRL2_TNn`) is implicitly and gradually reduced to zero. The time it takes to reduce the value to zero depends on the parameter `CTRL_ParChgTime`. In the case of vertical axes, the integral term is needed to reduce position deviations during standstill.

0198441113956, V1.00, 07.2013

8.5.5.10 Controller parameter set 1

Parameter name	Description	Unit Minimum value Factory setting Maximum value	Data type R/W Persistent Expert	Parameter address via field-bus
CTRL1_KPn	Velocity controller P gain The default value is calculated on the basis of the motor parameters. In the case of switching between the two controller parameter sets, the values are adapted linearly over the time defined in the parameter CTRL_ParChgTime. In increments of 0.0001 A/min^{-1}. Changed settings become active immediately.	A/min^{-1} 0.0001 - 2.5400	UINT16 UINT16 R/W per. -	CANopen 3012:1$_h$ Modbus 4610
CTRL1_TNn	Velocity controller integral action time The default value is calculated. In the case of switching between the two controller parameter sets, the values are adapted linearly over the time defined in the parameter CTRL_ParChgTime. In increments of 0.01 ms. Changed settings become active immediately.	ms 0.00 - 327.67	UINT16 UINT16 R/W per. -	CANopen 3012:2$_h$ Modbus 4612
CTRL1_KPp	Position controller P gain The default value is calculated. In the case of switching between the two controller parameter sets, the values are adapted linearly over the time defined in the parameter CTRL_ParChgTime. In increments of 0.1 1/s. Changed settings become active immediately.	1/s 2.0 - 900.0	UINT16 UINT16 R/W per. -	CANopen 3012:3$_h$ Modbus 4614
CTRL1_TAUiref	Filter time constant of the reference current value filter In the case of switching between the two controller parameter sets, the values are adapted linearly over the time defined in the parameter CTRL_ParChgTime. In increments of 0.01 ms. Changed settings become active immediately.	ms 0.00 0.50 4.00	UINT16 UINT16 R/W per. -	CANopen 3012:5$_h$ Modbus 4618
CTRL1_TAUnref	Filter time constant of the reference velocity value filter In the case of switching between the two controller parameter sets, the values are adapted linearly over the time defined in the parameter CTRL_ParChgTime. In increments of 0.01 ms. Changed settings become active immediately.	ms 0.00 1.81 327.67	UINT16 UINT16 R/W per. -	CANopen 3012:4$_h$ Modbus 4616

0198441113956, V1.00, 07.2013

Parameter name	Description	Unit Minimum value Factory setting Maximum value	Data type R/W Persistent Expert	Parameter address via field-bus
CTRL1_KFPp	Velocity feed-forward control In the case of switching between the two controller parameter sets, the values are adapted linearly over the time defined in the parameter CTRL_ParChgTime. In increments of 0.1 %. Changed settings become active immediately.	% 0.0 0.0 200.0	UINT16 UINT16 R/W per. -	CANopen 3012:6h Modbus 4620
CTRL1_Nf1damp	Notch filter 1: Damping In increments of 0.1 %. Changed settings become active immediately.	% 55.0 90.0 99.0	UINT16 UINT16 R/W per. expert	CANopen 3012:8h Modbus 4624
CTRL1_Nf1freq	Notch filter 1: Frequency The filter is switched off at a value of 15000. In increments of 0.1 Hz. Changed settings become active immediately.	Hz 50.0 1500.0 1500.0	UINT16 UINT16 R/W per. expert	CANopen 3012:9h Modbus 4626
CTRL1_Nf1bandw	Notch filter 1: Bandwidth Definition of bandwidth: 1 - Fb/F0 In increments of 0.1 %. Changed settings become active immediately.	% 1.0 70.0 90.0	UINT16 UINT16 R/W per. expert	CANopen 3012:Ah Modbus 4628
CTRL1_Nf2damp	Notch filter 2: Damping In increments of 0.1 %. Changed settings become active immediately.	% 55.0 90.0 99.0	UINT16 UINT16 R/W per. expert	CANopen 3012:Bh Modbus 4630
CTRL1_Nf2freq	Notch filter 2: Frequency The filter is switched off at a value of 15000. In increments of 0.1 Hz. Changed settings become active immediately.	Hz 50.0 1500.0 1500.0	UINT16 UINT16 R/W per. expert	CANopen 3012:Ch Modbus 4632
CTRL1_Nf2bandw	Notch filter 2: Bandwidth Definition of bandwidth: 1 - Fb/F0 In increments of 0.1 %. Changed settings become active immediately.	% 1.0 70.0 90.0	UINT16 UINT16 R/W per. expert	CANopen 3012:Dh Modbus 4634
CTRL1_Osupdamp	Overshoot suppression filter: Damping The filter is switched off at a value of 0. In increments of 0.1 %. Changed settings become active immediately.	% 0.0 0.0 50.0	UINT16 UINT16 R/W per. expert	CANopen 3012:Eh Modbus 4636

0198441113956, V1.00, 07.2013

Parameter name	Description	Unit Minimum value Factory setting Maximum value	Data type R/W Persistent Expert	Parameter address via field-bus
CTRL1_Osupdelay	Overshoot suppression filter: Time delay The filter is switched off at a value of 0. In increments of 0.01 ms. Changed settings become active immediately.	ms 0.00 0.00 75.00	UINT16 UINT16 R/W per. expert	CANopen 3012:F_h Modbus 4638
CTRL1_Kfric	Friction compensation: Gain In increments of 0.01 A_{rms}. Changed settings become active immediately.	A_{rms} 0.00 0.00 10.00	UINT16 UINT16 R/W per. expert	CANopen 3012:10_h Modbus 4640

0198441113956, V1.00, 07.2013

8.5.5.11 Controller parameter set 2

Parameter name	Description	Unit Minimum value Factory setting Maximum value	Data type R/W Persistent Expert	Parameter address via field-bus
CTRL2_KFPp	Velocity feed-forward control In the case of switching between the two controller parameter sets, the values are adapted linearly over the time defined in the parameter CTRL_ParChgTime. In increments of 0.1 %. Changed settings become active immediately.	% 0.0 0.0 200.0	UINT16 UINT16 R/W per. -	CANopen 3013:6h Modbus 4876
CTRL2_Kfric	Friction compensation: Gain In increments of 0.01 A_{rms}. Changed settings become active immediately.	A_{rms} 0.00 0.00 10.00	UINT16 UINT16 R/W per. expert	CANopen 3013:10h Modbus 4896
CTRL2_KPn	Velocity controller P gain The default value is calculated on the basis of the motor parameters. In the case of switching between the two controller parameter sets, the values are adapted linearly over the time defined in the parameter CTRL_ParChgTime. In increments of 0.0001 A/min^{-1}. Changed settings become active immediately.	A/min^{-1} 0.0001 - 2.5400	UINT16 UINT16 R/W per. -	CANopen 3013:1h Modbus 4866
CTRL2_KPp	Position controller P gain The default value is calculated. In the case of switching between the two controller parameter sets, the values are adapted linearly over the time defined in the parameter CTRL_ParChgTime. In increments of 0.1 1/s. Changed settings become active immediately.	1/s 2.0 - 900.0	UINT16 UINT16 R/W per. -	CANopen 3013:3h Modbus 4870
CTRL2_Nf1bandw	Notch filter 1: Bandwidth Definition of bandwidth: 1 - Fb/F0 In increments of 0.1 %. Changed settings become active immediately.	% 1.0 70.0 90.0	UINT16 UINT16 R/W per. expert	CANopen 3013:Ah Modbus 4884
CTRL2_Nf1damp	Notch filter 1: Damping In increments of 0.1 %. Changed settings become active immediately.	% 55.0 90.0 99.0	UINT16 UINT16 R/W per. expert	CANopen 3013:8h Modbus 4880
CTRL2_Nf1freq	Notch filter 1: Frequency The filter is switched off at a value of 15000. In increments of 0.1 Hz. Changed settings become active immediately.	Hz 50.0 1500.0 1500.0	UINT16 UINT16 R/W per. expert	CANopen 3013:9h Modbus 4882

0198441113956, V1.00, 07.2013

Parameter name	Description	Unit Minimum value Factory setting Maximum value	Data type R/W Persistent Expert	Parameter address via field-bus
CTRL2_Nf2bandw	Notch filter 2: Bandwidth Definition of bandwidth: 1 - Fb/F0 In increments of 0.1 %. Changed settings become active immediately.	% 1.0 70.0 90.0	UINT16 UINT16 R/W per. expert	CANopen 3013:D_h Modbus 4890
CTRL2_Nf2damp	Notch filter 2: Damping In increments of 0.1 %. Changed settings become active immediately.	% 55.0 90.0 99.0	UINT16 UINT16 R/W per. expert	CANopen 3013:B_h Modbus 4886
CTRL2_Nf2freq	Notch filter 2: Frequency The filter is switched off at a value of 15000. In increments of 0.1 Hz. Changed settings become active immediately.	Hz 50.0 1500.0 1500.0	UINT16 UINT16 R/W per. expert	CANopen 3013:C_h Modbus 4888
CTRL2_Osupdamp	Overshoot suppression filter: Damping The filter is switched off at a value of 0. In increments of 0.1 %. Changed settings become active immediately.	% 0.0 0.0 50.0	UINT16 UINT16 R/W per. expert	CANopen 3013:E_h Modbus 4892
CTRL2_Osupdelay	Overshoot suppression filter: Time delay The filter is switched off at a value of 0. In increments of 0.01 ms. Changed settings become active immediately.	ms 0.00 0.00 75.00	UINT16 UINT16 R/W per. expert	CANopen 3013:F_h Modbus 4894
CTRL2_TAUiref	Filter time constant of the reference current value filter In the case of switching between the two controller parameter sets, the values are adapted linearly over the time defined in the parameter CTRL_ParChgTime. In increments of 0.01 ms. Changed settings become active immediately.	ms 0.00 0.50 4.00	UINT16 UINT16 R/W per. -	CANopen 3013:5_h Modbus 4874
CTRL2_TAUnref	Filter time constant of the reference velocity value filter In the case of switching between the two controller parameter sets, the values are adapted linearly over the time defined in the parameter CTRL_ParChgTime. In increments of 0.01 ms. Changed settings become active immediately.	ms 0.00 1.81 327.67	UINT16 UINT16 R/W per. -	CANopen 3013:4_h Modbus 4872

0198441113956, V1.00, 07.2013

Parameter name	Description	Unit Minimum value Factory setting Maximum value	Data type R/W Persistent Expert	Parameter address via field-bus
CTRL2_TNn	Velocity controller integral action time The default value is calculated. In the case of switching between the two controller parameter sets, the values are adapted linearly over the time defined in the parameter CTRL_ParChgTime. In increments of 0.01 ms. Changed settings become active immediately.	ms 0.00 - 327.67	UINT16 UINT16 R/W per. -	CANopen 3013:2_h Modbus 4868

0198441113956, V1.00, 07.2013

8.5.6 Settings of parameter _DCOMstatus

The assignment of bit 11 of the parameter _DCOMstatus can be set.

Parameter name	Description	Unit Minimum value Factory setting Maximum value	Data type R/W Persistent Expert	Parameter address via field-bus
_DCOMstatus	DriveCom status word Bit assignments: Bits 0 ... 3: Status bits Bit 4: Voltage enabled Bits 5 ... 6: Status bits Bit 7: Warning Bit 8: HALT request active Bit 9: Remote Bit 10: Target reached Bit 11: Assignment can be set via parameter DS402intLim Bit 12: Operating mode-specific Bit 13: x_err Bit 14: x_end Bit 15: ref_ok	- - - -	UINT16 UINT16 R/- - -	CANopen 6041:0h Modbus 6916

The assignment of bit 11 can be set via the parameter DS402intLim.

Parameter name	Description	Unit Minimum value Factory setting Maximum value	Data type R/W Persistent Expert	Parameter address via field-bus
DS402intLim	DS402 status word: Setting for bit 11 (internal limit) **0 / None**: Not used (reserved) **1 / Current Below Threshold**: Current threshold value **2 / Velocity Below Threshold**: Velocity threshold value **3 / In Position Deviation Window**: Position deviation window **4 / In Velocity Deviation Window**: Velocity deviation window **5 / Position Register Channel 1**: Position register channel 1 **6 / Position Register Channel 2**: Position register channel 2 **7 / Position Register Channel 3**: Position register channel 3 **8 / Position Register Channel 4**: Position register channel 4 **9 / Hardware Limit Switch**: Hardware limit switch **10 / RMAC active or finished**: Relative movement after capture is active or finished **11 / Position Window**: Position window Setting for: Bit 11 of the parameter _DCOMstatus Bit 10 of the parameter _actionStatus Bit 10 of the parameter _DPL_motionStat Changed settings become active immediately.	- 0 0 11	UINT16 UINT16 R/W per. -	CANopen 301B:1Eh Modbus 6972

0198441113956, V1.00, 07.2013

8.6 Functions for target value processing

8.6.1 Stop movement with Halt

With a Halt, the current movement is interrupted; it can be resumed.

A Halt can be triggered via a digital signal input or a fieldbus command.

In order to interrupt a movement via a signal input, you must first parameterize the signal input function "Halt", see chapter "8.5.2 Setting the digital signal inputs and signal outputs".

The movement can be interrupted with 2 different deceleration types.

- Deceleration via deceleration ramp
- Deceleration via torque ramp

Setting the type of deceleration

The parameter `LIM_HaltReaction` lets you set the type of deceleration.

Parameter name	Description	Unit Minimum value Factory setting Maximum value	Data type R/W Persistent Expert	Parameter address via fieldbus
`LIM_HaltReaction`	Halt option code **1 / Deceleration Ramp**: Deceleration ramp **3 / Torque Ramp**: Torque ramp Type of deceleration for Halt. Setting of deceleration ramp with parameter RAMP_v_dec. Setting of torque ramp with parameter LIM_I_maxHalt. If a deceleration ramp is already active, the parameter cannot be written. Changed settings become active immediately.	- 1 1 3	INT16 INT16 R/W per. -	CANopen 605D:0_h Modbus 1582

Setting the deceleration ramp

The deceleration ramp is set with the parameter `Ramp_v_dec` via the motion profile for the velocity, see chapter "8.5.4 Setting the motion profile for the velocity".

0198441113956, V1.00, 07.2013

Setting the torque ramp The parameter `LIM_I_maxHalt` lets you set the torque ramp.

Parameter name	Description	Unit Minimum value Factory setting Maximum value	Data type R/W Persistent Expert	Parameter address via field-bus
`LIM_I_maxHalt`	Current value for Halt This value is only limited by the minimum/ maximum value range (no limitation of this value by motor/power stage). In the case of a Halt, the actual current limit (_Imax_actual) is one of the following values (whichever is lowest): - LIM_I_maxHalt - M_I_max - PA_I_max Further current reductions caused by I2t monitoring are also taken into account during a Halt. Default: PA_I_max at 8 kHz PWM frequency and 230/480 V mains voltage In increments of 0.01 A_{rms}. Changed settings become active immediately.	A_{rms} - - -	UINT16 UINT16 R/W per. -	CANopen 3011:E_h Modbus 4380

0198441113956, V1.00, 07.2013

8.6.2 Stopping a movement with Quick Stop

With a Quick Stop, the current movement is stopped.

A Quick Stop can be triggered by a detected error of error classes 1 or 2 or via a fieldbus command.

The movement can be stopped with 2 different deceleration types.

- Deceleration via deceleration ramp
- Deceleration via torque ramp

In addition, you can set the operating state to switch to after the deceleration.

- Transition to operating state **9** Fault
- Transition to operating state **7** Quick Stop Active

0198441113956, V1.00, 07.2013

Setting the type of deceleration The parameter `LIM_QStopReact` lets you set the type of deceleration.

Parameter name	Description	Unit Minimum value Factory setting Maximum value	Data type R/W Persistent Expert	Parameter address via fieldbus
`LIM_QStopReact`	Quick Stop option code **-2 / Torque ramp (Fault)**: Use torque ramp and transit to operating state 9 Fault **-1 / Deceleration Ramp (Fault)**: Use deceleration ramp and transit to operating state 9 Fault **6 / Deceleration ramp (Quick Stop)**: Use deceleration ramp and remain in operating state 7 Quick Stop **7 / Torque ramp (Quick Stop)**: Use torque ramp and remain in operating state 7 Quick Stop Type of deceleration for Quick Stop. Setting of deceleration ramp with parameter RAMPquickstop. Setting of torque ramp with parameter LIM_I_maxQSTP. If a deceleration ramp is already active, the parameter cannot be written. Changed settings become active immediately.	- -2 6 7	INT16 INT16 R/W per. -	CANopen 3006:18h Modbus 1584

Setting the deceleration ramp The parameter `RAMPquickstop` lets you set the deceleration ramp.

Parameter name	Description	Unit Minimum value Factory setting Maximum value	Data type R/W Persistent Expert	Parameter address via fieldbus
`RAMPquickstop`	Deceleration ramp for Quick Stop Deceleration ramp for a software stop or an error with error class 1 or 2. Changed settings become active the next time the motor moves.	usr_a 1 6000 2147483647	UINT32 UINT32 R/W per. -	CANopen 3006:12h Modbus 1572

0198441113956, V1.00, 07.2013

Setting the torque ramp The parameter `LIM_I_maxQSTP` lets you set the torque ramp.

Parameter name	Description	Unit Minimum value Factory setting Maximum value	Data type R/W Persistent Expert	Parameter address via field-bus
`LIM_I_maxQSTP`	Current value for Quick Stop This value is only limited by the minimum/ maximum value range (no limitation of this value by motor/power stage). In the case of a Quick Stop, the actual current limit (_Imax_actual) is one of the following values (whichever is lowest): - LIM_I_maxQSTP - M_I_max - PA_I_max Further current reductions caused by I2t monitoring are also taken into account during a Quick Stop. Default: PA_I_max at 8 kHz PWM frequency and 230/480 V mains voltage In increments of 0.01 A_{rms}. Changed settings become active immediately.	A_{rms} - - -	UINT16 UINT16 R/W per. -	CANopen 3011:D_h Modbus 4378

0198441113956, V1.00, 07.2013

8.6.3 Limitation of the velocity via signal inputs

Limitation via digital signal input

The velocity can be limited to a specific value via a digital signal input.

The parameter `IO_v_limit` lets you set the velocity limitation.

Parameter name	Description	Unit Minimum value Factory setting Maximum value	Data type R/W Persistent Expert	Parameter address via field-bus
`IO_v_limit`	Velocity limitation via input A velocity limitation can be activated via a digital input. NOTE: In operating mode Profile Torque, the minimum velocity is internally limited to 100 min^{-1}. Changed settings become active immediately.	usr_v 0 10 2147483647	UINT32 UINT32 R/W per. -	CANopen 3006:1E_h Modbus 1596

In order to limit the velocity via a digital signal input, you must first parameterize the signal input function "Velocity Limitation", see chapter "8.5.2 Setting the digital signal inputs and signal outputs".

0198441113956, V1.00, 07.2013

8.6.4 Limitation of the current via signal inputs

Limitation via digital signal input

The current can be limited to a specific value via a digital signal input.

The parameter `IO_I_limit` lets you set the current limitation.

Parameter name	Description	Unit Minimum value Factory setting Maximum value	Data type R/W Persistent Expert	Parameter address via field-bus
`IO_I_limit`	Current limitation via input A current limit can be activated via a digital input. In increments of 0.01 A_{rms}. Changed settings become active immediately.	A_{rms} 0.00 0.20 300.00	UINT16 UINT16 R/W per. -	CANopen 3006:27_h Modbus 1614

In order to limit the current via a digital signal input, you must first parameterize the signal input function "Current Limitation", see chapter "8.5.2 Setting the digital signal inputs and signal outputs".

0198441113956, V1.00, 07.2013

8.6.5 Jerk limitation

Jerk limitation smoothes sudden acceleration changes to allow for smooth transitions with almost no jerking.

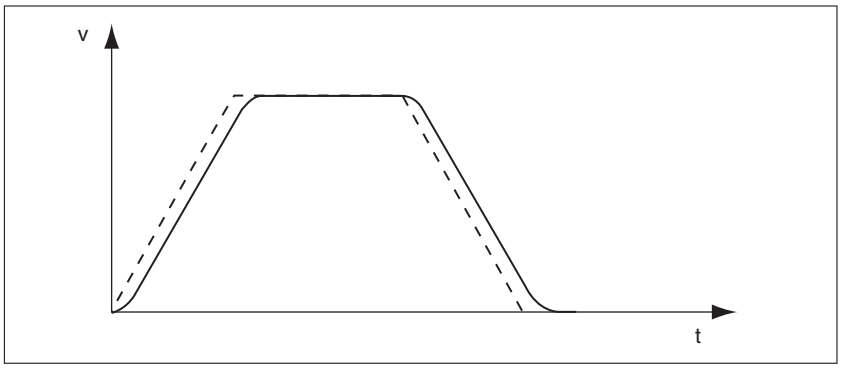

Figure 94: Jerk limitation

Availability Jerk limitation is available in the following operating modes.

- Jog
- Profile Position
- Homing

Jerk limitation is activated and set via the parameter `RAMP_v_jerk`.

Parameter name	Description	Unit Minimum value Factory setting Maximum value	Data type R/W Persistent Expert	Parameter address via field-bus
`RAMP_v_jerk`	Jerk limitation of the motion profile for velocity **0 / Off**: Off **1 / 1**: 1 ms **2 / 2**: 2 ms **4 / 4**: 4 ms **8 / 8**: 8 ms **16 / 16**: 16 ms **32 / 32**: 32 ms **64 / 64**: 64 ms **128 / 128**: 128 ms Adjustments can only be made if the operating mode is inactive (x_end=1). Changed settings become active the next time the motor moves.	ms 0 0 128	UINT16 UINT16 R/W per. -	CANopen 3006:D_h Modbus 1562

0198441113956, V1.00, 07.2013

8.6.6 Zero Clamp

The motor can be stopped via a digital signal input. The velocity of the motor must be below a parameterizable velocity value.

Availability The signal input function "Zero Clamp" is available in the following operating mode:

- Profile Velocity

Target velocities below the parameterized velocity value are interpreted as "zero".

The signal input function "Zero Clamp" has a hysteresis of 20 %.

The parameter `MON_v_zeroclamp` lets you set the velocity value.

Parameter name	Description	Unit Minimum value Factory setting Maximum value	Data type R/W Persistent Expert	Parameter address via field-bus
`MON_v_zeroclamp`	Velocity limit for Zero Clamp A Zero Clamp operation is only possible if the reference velocity is below the Zero Clamp velocity limit. Changed settings become active immediately.	usr_v 0 10 2147483647	UINT32 UINT32 R/W per. -	CANopen 3006:28$_h$ Modbus 1616

In order to stop the motor via a digital signal input, you must first parameterize the signal input function "Zero Clamp", see chapter "8.5.2 Setting the digital signal inputs and signal outputs".

0198441113956, V1.00, 07.2013

8.6.7 Setting a signal output via parameter

The digital signal outputs can be set as required via the fieldbus.

In order to set a digital signal output via the parameter, you must first parameterize the signal input function "Freely Available", see chapter "8.5.2 Setting the digital signal inputs and signal outputs".

The parameter `IO_DQ_set` lets you set the digital signal outputs.

Parameter name	Description	Unit Minimum value Factory setting Maximum value	Data type R/W Persistent Expert	Parameter address via field-bus
`IO_DQ_set`	Setting the digital outputs directly Write access to output bits is only active if the signal pin is available as an output and if the function of the output was set to 'Available as required'. Coding of the individual signals: Bit 0: DQ0 Bit 1: DQ1	- - - -	UINT16 UINT16 R/W - -	CANopen 3008:11_h Modbus 2082

8.6.8 Starting a movement via a signal input

The signal input function "Start Profile Positioning" sets the start signal for the movement in the operating mode Profile Position. The positioning movement is then executed when the edge at the digital input rises.

0198441113956, V1.00, 07.2013

8.6.9 Position capture via signal input

The motor position can be captured when a signal is detected at a Capture input.

Number of Capture inputs

2 Capture inputs are available.

- `DI0/CAP1` and `DI1/CAP2`

Selection of the method

The motor position can be captured in 2 different ways:

- One-time position capture.

  One-time capture means that the position is captured at the first edge.
- Continuous motor position capture

  Continuous capture means that the motor position is captured anew at every edge. The previously captured value is lost.

The motor position can be captured when the edge at the Capture input rises or falls.

Accuracy

A jitter of 2 µs results in an inaccuracy of the captured position of approximately 1.6 user-defined units at a velocity of 3000 min^{-1}.
(3000 min^{-1} = (3000*16384)/(60*10^6) = 0.8 usr_p/µs)

If the factory settings for scaling are used, 1.6 user-defined units correspond to 0.036 °.

The captured motor position is less accurate during the acceleration phase and the deceleration phase.

0198441113956, V1.00, 07.2013

Status messages The parameter `_CapStatus` indicates the capture status.

Parameter name	Description	Unit Minimum value Factory setting Maximum value	Data type R/W Persistent Expert	Parameter address via field-bus
`_CapStatus`	Status of the capture inputs Read access: Bit 0: Position captured via input CAP1 Bit 1: Position captured via input CAP2	- - - -	UINT16 UINT16 R/- - -	CANopen 300A:1_h Modbus 2562

Captured position The captured position can be read via the following parameters:

Parameter name	Description	Unit Minimum value Factory setting Maximum value	Data type R/W Persistent Expert	Parameter address via field-bus
`_Cap1Pos`	Capture input 1 captured position Captured position at the time of the "capture signal". The captured position is re-calculated after "Position Setting" or "Reference Movement".	usr_p - - -	INT32 INT32 R/- - -	CANopen 300A:6_h Modbus 2572
`_Cap2Pos`	Capture input 2 captured position Captured position at the time of the "capture signal". The captured position is re-calculated after "Position Setting" or "Reference Movement".	usr_p - - -	INT32 INT32 R/- - -	CANopen 300A:7_h Modbus 2574
`_Cap1Count`	Capture input 1 event counter Counts the capture events. The event counter is reset when capture input 1 is activated.	- - - -	UINT16 UINT16 R/- - -	CANopen 300A:8_h Modbus 2576
`_Cap2Count`	Capture input 2 event counter Counts the capture events. The event counter is reset when capture input 2 is activated.	- - - -	UINT16 UINT16 R/- - -	CANopen 300A:9_h Modbus 2578

0198441113956, V1.00, 07.2013

Starting position capture

The following parameters let you start position capture.

- Set the desired method with the parameters `Cap1Activate` and `Cap2Activate`.

Parameter name	Description	Unit Minimum value Factory setting Maximum value	Data type R/W Persistent Expert	Parameter address via field-bus
`Cap1Activate`	Capture input 1 start/stop **0 / Capture Stop**: Cancel capture function **1 / Capture Once**: Start one-time capture **2 / Capture Continuous**: Start continuous capture In the case of one-time capture, the function is terminated when the first value is captured. In the case of continuous capture, the function continues to run. Changed settings become active immediately.	- 0 - 2	UINT16 UINT16 R/W - -	CANopen 300A:4_h Modbus 2568
`Cap2Activate`	Capture input 2 start/stop **0 / Capture Stop**: Cancel capture function **1 / Capture Once**: Start one-time capture **2 / Capture Continuous**: Start continuous capture In the case of one-time capture, the function is terminated when the first value is captured. In the case of continuous capture, the function continues to run. Changed settings become active immediately.	- 0 - 2	UINT16 UINT16 R/W - -	CANopen 300A:5_h Modbus 2570

Setting the edge

The following parameters let you set the edge for position capture.

- Set the desired edge with the parameters `Cap1Config` and `Cap2Config`.

Parameter name	Description	Unit Minimum value Factory setting Maximum value	Data type R/W Persistent Expert	Parameter address via fieldbus
`Cap1Config`	Capture input 1 configuration **0 / Falling Edge**: Position capture at falling edge **1 / Rising Edge**: Position capture at rising edge Changed settings become active immediately.	- 0 0 1	UINT16 UINT16 R/W - -	CANopen 300A:2_h Modbus 2564
`Cap2Config`	Capture input 2 configuration **0 / Falling Edge**: Position capture at falling edge **1 / Rising Edge**: Position capture at rising edge **2 / Both Edges**: Position capture at both edges Changed settings become active immediately.	- 0 0 1	UINT16 UINT16 R/W - -	CANopen 300A:3_h Modbus 2566

0198441113956, V1.00, 07.2013

8.6.10 Relative Movement After Capture (RMAC)

Relative Movement After Capture (RMAC) starts a relative movement via a signal input while another movement is running.

The target position and the velocity can be parameterized.

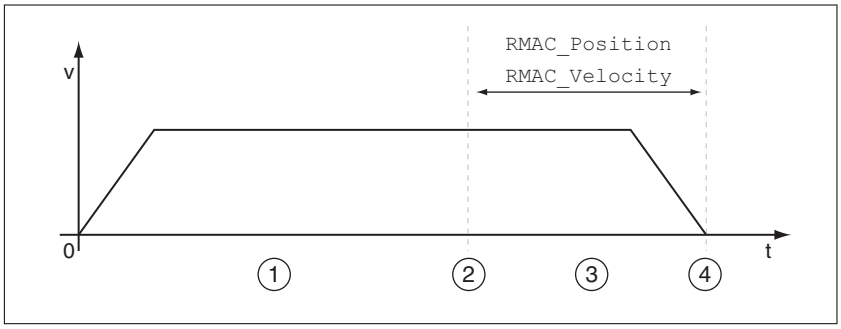

Figure 95: Relative Movement After Capture

(1) Movement with set operating mode (for example operating mode Profile Velocity)

(2) Start of the relative movement after capture with the signal input function Start Signal Of RMAC

(3) Relative movement runs

(4) Target position reached

Operating modes

A Relative Movement After Capture (RMAC) can be started in the following operating modes:

- Jog
- Profile Torque
- Profile Velocity
- Profile Position

Signal input functions

The signal input function "Start Signal Of RMAC" is required to start the relative movement.

The signal input function must have been parameterized, see chapter "8.5.2 Setting the digital signal inputs and signal outputs".

Status indication

The status is available via a signal output or via the fieldbus.

In order to read the status via a signal output, you must first parameterize the signal output function "RMAC Active Or Finished", see chapter "8.5.2 Setting the digital signal inputs and signal outputs".

In order to read the status via the fieldbus, you must set the parameter `DS402intLim` to the value "RMAC active or finished", see chapter "8.5.6 Settings of parameter `_DCOMstatus`".

In addition, the current status is available via the parameter `_RMAC_Status`.

0198441113956, V1.00, 07.2013

Parameter name	Description	Unit Minimum value Factory setting Maximum value	Data type R/W Persistent Expert	Parameter address via fieldbus
_RMAC_Status	Status of relative movement after capture **0 / Not Active**: Not active **1 / Active Or Finished**: Relative movement after capture is active or finished	- 0 - 1	UINT16 UINT16 R/- - -	CANopen 3023:11_h Modbus 8994

Activates Relative Movement After Capture

Relative Movement After Capture (RMAC) must be activated before it can be started.

Relative Movement After Capture (RMAC) is activated via the following parameter:

Parameter name	Description	Unit Minimum value Factory setting Maximum value	Data type R/W Persistent Expert	Parameter address via fieldbus
RMAC_Activate	Activation of relative movement after capture **0 / Off**: Off **1 / On**: On Changed settings become active immediately.	- 0 0 1	UINT16 UINT16 R/W - -	CANopen 3023:C_h Modbus 8984

It is also possible to activate relative Movement After Capture (RMAC) via the signal input function "Activate RMAC".

Target values

The target position and the velocity for the relative movement are set via the following parameters.

Parameter name	Description	Unit Minimum value Factory setting Maximum value	Data type R/W Persistent Expert	Parameter address via fieldbus
RMAC_Position	Target position of relative movement after capture Minimum/maximum values depend on: - Scaling factor Changed settings become active the next time the motor moves.	usr_p - 0 -	INT32 INT32 R/W per. -	CANopen 3023:D_h Modbus 8986
RMAC_Velocity	Velocity of relative movement after capture Value 0: Use of current motor velocity Value >0: Value is the target velocity The adjustable value is internally limited to the setting in RAMP_v_max. Changed settings become active the next time the motor moves.	usr_v 0 0 2147483647	UINT32 UINT32 R/W per. -	CANopen 3023:E_h Modbus 8988

Edge for the start signal

The edge which is to trigger the relative movement is set via the following parameter.

0198441113956, V1.00, 07.2013

Parameter name	Description	Unit Minimum value Factory setting Maximum value	Data type R/W Persistent Expert	Parameter address via fieldbus
RMAC_Edge	Edge of capture signal for relative movement after capture **0 / Falling edge**: Falling edge **1 / Rising edge**: Rising edge	- 0 0 1	UINT16 UINT16 R/W per. -	CANopen 3023:10_h Modbus 8992

Response to overtravelling of the target position

Depending on the set velocity, target position and deceleration ramp, the target position may be overtravelled.

The response to overtravelling of the target position is set via the following parameter.

Parameter name	Description	Unit Minimum value Factory setting Maximum value	Data type R/W Persistent Expert	Parameter address via fieldbus
RMAC_Response	Response if target postion is overtraveld **0 / Error Class 1**: Error class 1 **1 / No Movement To Target Position**: No movement to target position **2 / Movement To Target Position**: Movement to target position Changed settings become active immediately.	- 0 0 2	UINT16 UINT16 R/W per. -	CANopen 3023:F_h Modbus 8990

0198441113956, V1.00, 07.2013

8.7 Functions for monitoring movements

8.7.1 Limit switches

⚠ WARNING

LOSS OF CONTROL

The use of limit switches can provide some protection against hazards (for example, collision with mechanical stop caused by incorrect reference values).

- If possible, use the limit switches.
- Verify correct connection of the limit switches.
- Verify the correct installation of the limit switches. The limit switches must be mounted in a position far enough away from the mechanical stop to allow for an adequate stopping distance.
- You must release the limit switches before you can use them.
- Verify the correct function of the limit switches.

Failure to follow these instructions can result in death, serious injury or equipment damage.

Limit switches

Movements can be monitored using limit switches. A positive limit switch and a negative limit switch can be used for monitoring.

If the positive or negative limit switch are tripped, the movement stops. An error message is generated and the operating state switches to **7** Quick Stop Active.

The error message can be reset by means of a "Fault Reset". The operating state switches back to **6** Operation Enabled.

The movement can continue, however, only in the opposite direction. For example, if the positive limit switch was triggered, further movement is only possible in negative direction. In the case of further movement in positive direction, a new error message is generated and the operating state switches back to **7** Quick Stop Active.

The parameters `IOsigLIMP` and `IOsigLIMN` are used to set the the type of limit switch.

0198441113956, V1.00, 07.2013

Parameter name	Description	Unit Minimum value Factory setting Maximum value	Data type R/W Persistent Expert	Parameter address via field-bus
IOsigLIMP	Signal evaluation for positive limit switch **0 / Inactive**: Inactive **1 / Normally closed**: Normally closed NC **2 / Normally open**: Normally open NO Setting can only be changed if power stage is disabled. Changed settings become active the next time the power stage is enabled.	- 0 1 2	UINT16 UINT16 R/W per. -	CANopen 3006:10_h Modbus 1568
IOsigLIMN	Signal evaluation for negative limit switch **0 / Inactive**: Inactive **1 / Normally closed**: Normally closed NC **2 / Normally open**: Normally open NO Setting can only be changed if power stage is disabled. Changed settings become active the next time the power stage is enabled.	- 0 1 2	UINT16 UINT16 R/W per. -	CANopen 3006:F_h Modbus 1566

The signal input functions "Positive Limit Switch (LIMP)" and "Negative Limit Switch (LIMN)" must have been parameterized, see chapter "8.5.2 Setting the digital signal inputs and signal outputs".

If possible, use normally closed contacts so that a wire break can be signaled as an error.

0198441113956, V1.00, 07.2013

8.7.2 Reference switch

The reference switch is only active in the operating mode Homing.

The parameter `IOsigREF` lets you set the type of reference switch.

Parameter name	Description	Unit Minimum value Factory setting Maximum value	Data type R/W Persistent Expert	Parameter address via field-bus
`IOsigREF`	Signal evaluation for reference switch **1 / Normally Closed**: Normally closed NC **2 / Normally Open**: Normally open NO The reference switch is only active while a reference movement to the reference switch is processed. Setting can only be changed if power stage is disabled. Changed settings become active the next time the power stage is enabled.	- 1 1 2	UINT16 UINT16 R/W per. -	CANopen 3006:E_h Modbus 1564

The signal input function "Reference Switch (REF)" must have been parameterized, see chapter
"8.5.2 Setting the digital signal inputs and signal outputs".

If possible, use normally closed contacts so that a wire break can be signaled as an error.

0198441113956, V1.00, 07.2013

8.7.3 Software limit switches

Movements can be monitored using software limit switches. A positive position limit and a negative position limit can be set for monitoring.

If the positive or negative position limit switch are reached, the movement stops. An error message is generated and the operating state switches to **7** Quick Stop Active.

The error message can be reset by means of a "Fault Reset". The operating state switches back to **6** Operation Enabled.

The movement can continue, however, only in the opposite direction of the position limit. For example, if the positive position limit was reached, further movement is only possible in negative direction. In the case of further movement in positive direction, a new error message is generated and the operating state switches back to **7** Quick Stop Active.

Prerequisite

Software limit switch monitoring only works with a valid zero point, see chapter "8.4.1 Zero point of the movement range".

Behavior in operating modes with target positions

In the case of operating modes with target positions, the target position is compared to the position limits before the movement is started. The movement is started normally, even if the target position is greater than the positive position limit or less than the negative position limit. However, the movement is stopped before the position limit is exceeded.

In the following operating modes, the target position is checked prior to the start of a movement.

- Jog (step movement)
- Profile Position

Activation

The software limit switches are activated via the parameter `MON_SW_Limits`.

Parameter name	Description	Unit Minimum value Factory setting Maximum value	Data type R/W Persistent Expert	Parameter address via field-bus
`MON_SW_Limits`	Monitoring of software limit switches **0 / None**: Deactivated **1 / SWLIMP**: Activation of software limit switches positive direction **2 / SWLIMN**: Activation of software limit switches negative direction **3 / SWLIMP+SWLIMN**: Activation of software limit switches both directions Monitoring of software limit switches only works in case of successful homing (ref_ok = 1). Changed settings become active immediately.	- 0 0 3	UINT16 UINT16 R/W per. -	CANopen 3006:3h Modbus 1542

0198441113956, V1.00, 07.2013

Setting position limits The software limit switches are set via the parameters `MON_swLimP` and `MON_swLimN`.

Parameter name	Description	Unit Minimum value Factory setting Maximum value	Data type R/W Persistent Expert	Parameter address via field-bus
`MON_swLimP`	Positive position limit for software limit switch If a user-defined value entered is outside of the permissible range, the limit switch limits are automatically set to the maximum user-defined value. Setting can only be changed if power stage is disabled. Changed settings become active the next time the power stage is enabled.	usr_p - 2147483647 -	INT32 INT32 R/W per. -	CANopen 607D:2_h Modbus 1544
`MON_swLimN`	Negative position limit for software limit switch Refer to description 'MON_swLimP' Setting can only be changed if power stage is disabled. Changed settings become active the next time the power stage is enabled.	usr_p - -2147483648 -	INT32 INT32 R/W per. -	CANopen 607D:1_h Modbus 1546

0198441113956, V1.00, 07.2013

8.7.4 Load-dependent position deviation (following error)

The load-dependent position deviation is the difference between the reference position and the actual position caused by the load.

Parameters are available to read the load-dependent position deviation during operation and the maximum position deviation reached so far.

The maximum permissible load-dependent position deviation can be parameterized. In addition, you can set the error class for a following error.

Availability

Monitoring of the load-dependent position deviation is available in the following operating modes:

- Jog
- Profile Position
- Homing

Reading the position deviation

The following parameters let you read the current load-dependent position deviation in user-defined units or revolutions.

Parameter name	Description	Unit Minimum value Factory setting Maximum value	Data type R/W Persistent Expert	Parameter address via fieldbus
`_p_dif_load_usr`	Current load-dependent position deviation between reference and actual position The load-dependent position deviation is the difference between the reference position and the actual position caused by the load. This value is used for following error monitoring.	usr_p -2147483648 - 2147483647	INT32 INT32 R/- - -	CANopen 301E:16h Modbus 7724
`_p_dif_load`	Current load-dependent position deviation between reference and actual position The load-dependent position deviation is the difference between the reference position and the actual position caused by the load. This value is used for following error monitoring. The parameter _p_dif_load_usr allows you to enter the value in user-defined units. In increments of 0.0001 revolution.	revolution -214748.3648 - 214748.3647	INT32 INT32 R/- - -	CANopen 301E:1Ch Modbus 7736

The following parameters let you read the maximum value of the load-dependent position deviation reached so far in user-defined units or revolutions.

0198441113956, V1.00, 07.2013

Parameter name	Description	Unit Minimum value Factory setting Maximum value	Data type R/W Persistent Expert	Parameter address via fieldbus
_p_dif_load_peak_usr	Maximum value of the load-dependent position deviation This parameter contains the maximum load-dependent position deviation reached so far. A write access resets this value. Changed settings become active immediately.	usr_p 0 - 2147483647	INT32 INT32 R/W - -	CANopen 301E:15h Modbus 7722
_p_dif_load_peak	Maximum value of the load-dependent position deviation This parameter contains the maximum load-dependent position deviation reached so far. A write access resets this value. The parameter _p_dif_load_peak_usr allows you to enter the value in user-defined units.. In increments of 0.0001 revolution. Changed settings become active immediately.	revolution 0.0000 - 429496.7295	UINT32 UINT32 R/W - -	CANopen 301E:1Bh Modbus 7734

Setting the position deviation

The following parameter lets you set the warning threshold for the maximum load-dependent position deviation.

Parameter name	Description	Unit Minimum value Factory setting Maximum value	Data type R/W Persistent Expert	Parameter address via fieldbus
MON_p_dif_warn	Maximum load-dependent position deviation (warning) 100.0 % correspond to the maximum position deviation (following error) as specified by means of parameter MON_p_dif_load. Changed settings become active immediately.	% 0 75 100	UINT16 UINT16 R/W per. -	CANopen 3006:29h Modbus 1618

The following parameters let you set the following error threshold in user-defined units or revolutions for the maximum load-dependent position deviation.

0198441113956, V1.00, 07.2013

Parameter name	Description	Unit Minimum value Factory setting Maximum value	Data type R/W Persistent Expert	Parameter address via fieldbus
MON_p_dif_load_usr	Maximum load-dependent position deviation (following error) The load-dependent position deviation is the difference between the reference position and the actual position caused by the load. The minimum value, the factory setting and the maximum value depend on the scaling factor. Changed settings become active immediately.	usr_p 1 16384 2147483647	INT32 INT32 R/W per. -	CANopen 3006:3E$_h$ Modbus 1660
MON_p_dif_load	Maximum load-dependent position deviation (following error) The load-dependent position deviation is the difference between the reference position and the actual position caused by the load. The parameter MON_p_dif_load_usr allows you to enter the value in user-defined units. In increments of 0.0001 revolution. Changed settings become active immediately.	revolution 0.0001 1.0000 200.0000	UINT32 UINT32 R/W per. -	CANopen 6065:0$_h$ Modbus 1606

Setting the error class The following parameter lets you set the error response to an excessively high load-dependent position deviation (following error).

Parameter name	Description	Unit Minimum value Factory setting Maximum value	Data type R/W Persistent Expert	Parameter address via fieldbus
ErrorResp_p_dif	Error response to following error **1 / Error Class 1**: Error class 1 **2 / Error Class 2**: Error class 2 **3 / Error Class 3**: Error class 3 Setting can only be changed if power stage is disabled. Changed settings become active the next time the power stage is enabled.	- 1 3 3	UINT16 UINT16 R/W per. -	CANopen 3005:B$_h$ Modbus 1302

0198441113956, V1.00, 07.2013

8.7.5 Motor standstill and direction of movement

The status of a movement can be monitored. You can read out whether the motor is at a standstill or whether it moves in a specific direction.

Monitoring A velocity of <10 min^{-1} is interpreted as standstill.

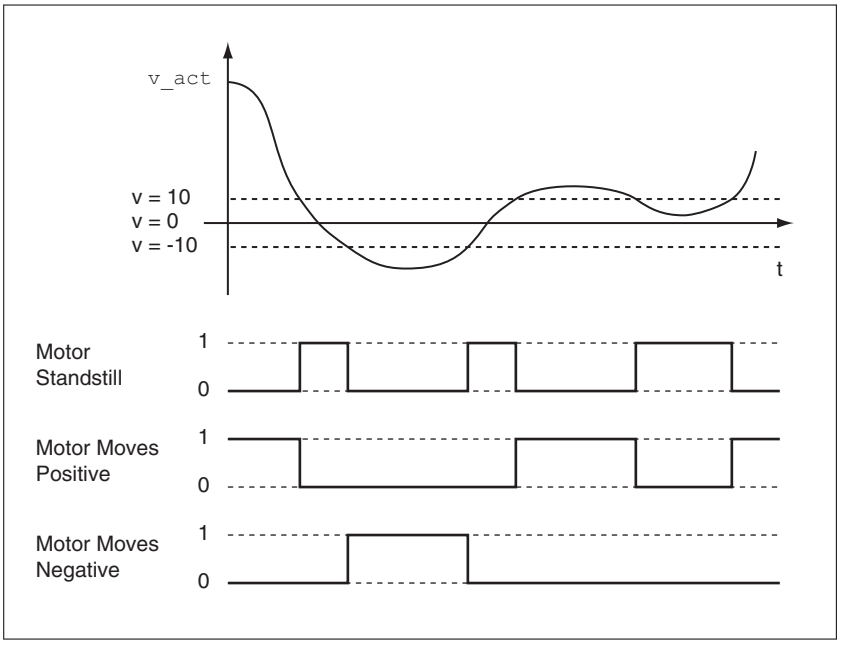

Figure 96: Motor standstill and direction of movement

The status is available via signal outputs. In order to read the status, you must first parameterize the signal output functions "Motor Standstill", "Motor Moves Positive" or "Motor Moves Negative", see chapter "8.5.2 Setting the digital signal inputs and signal outputs".

0198441113956, V1.00, 07.2013

8.7.6 Torque window

The torque window allows you to monitor whether the motor has reached the target torque.

If the difference between the target torque and the current torque remains in the torque window for the time `MON_tq_winTime`, the target torque is considered to have been reached.

Availability The torque window is available in the following operating modes.

- Profile Torque

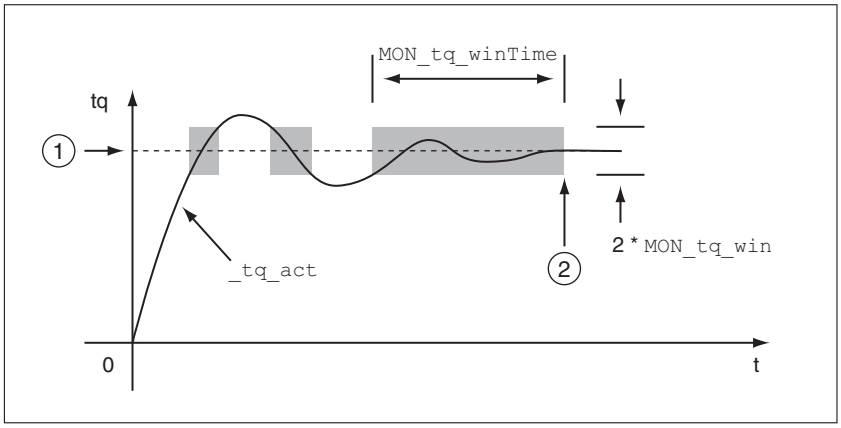

Figure 97: Torque window

(1) Target torque

(2) Target torque reached (the actual torque did not exceed the permissible deviation `MON_tq_win` during time `MON_tq_winTime`).

The parameters `MON_tq_win` and `MON_tq_winTime` specify the size of the window.

Parameter name	Description	Unit Minimum value Factory setting Maximum value	Data type R/W Persistent Expert	Parameter address via field-bus
`MON_tq_win`	Torque window, permissible deviation The torque window can only be activated in operating mode Profile Torque. In increments of 0.1 %. Changed settings become active immediately.	% 0.0 3.0 3000.0	UINT16 UINT16 R/W per. -	CANopen 3006:2D$_h$ Modbus 1626
`MON_tq_winTime`	Torque window, time Value 0: Torque window monitoring deactivated Changing the value causes a restart of torque monitoring. NOTE: Torque window is only used in operating mode Profile Torque. Changed settings become active immediately.	ms 0 0 16383	UINT16 UINT16 R/W per. -	CANopen 3006:2E$_h$ Modbus 1628

0198441113956, V1.00, 07.2013

8.7.7 Velocity window

The velocity window allows you to monitor whether the motor has reached the target velocity.

If the difference between the target velocity and the current motor velocity remains in the velocity window for the time `MON_v_winTime`, the target velocity is considered to have been reached.

Availability The velocity window is available in the following operating modes.

- Profile Velocity

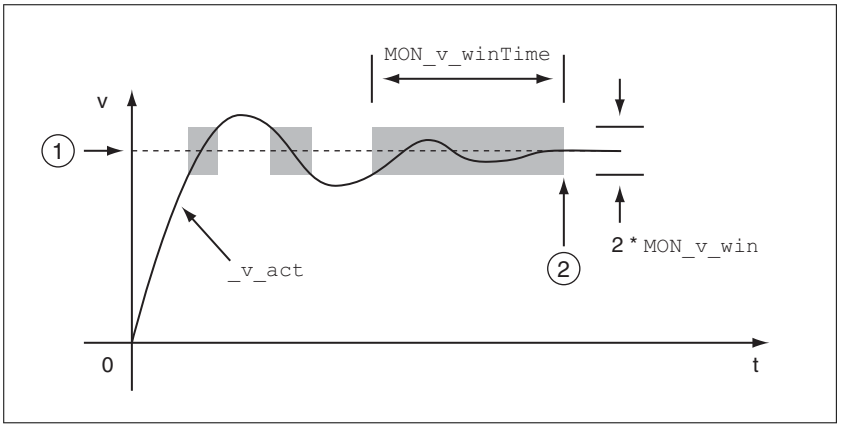

Figure 98: Velocity window

(1) Target velocity

(2) Target velocity reached (the target velocity did not exceed the permissible deviation `MON_v_win` during time `MON_v_winTime`).

The parameters `MON_v_win` and `MON_v_winTime` specify the size of the window.

Parameter name	Description	Unit Minimum value Factory setting Maximum value	Data type R/W Persistent Expert	Parameter address via field-bus
`MON_v_win`	Velocity window, permissible deviation Changed settings become active immediately.	usr_v 1 10 2147483647	UINT16 UINT32 R/W per. -	CANopen 606D:0h Modbus 1576
`MON_v_winTime`	Velocity window, time Value 0: Velocity window monitoring deactivated Changing the value causes a restart of velocity monitoring. Changed settings become active immediately.	ms 0 0 16383	UINT16 UINT16 R/W per. -	CANopen 606E:0h Modbus 1578

0198441113956, V1.00, 07.2013

8.7.8 Standstill window

The standstill window allows you to monitor whether the motor has reached the target position.

If the difference between the target position and the current motor position remains in the standstill window for the time `MON_p_winTime`, the target position is considered to have been reached.

Availability The standstill window is available in the following operating modes.

- Jog (step movement)
- Profile Position
- Homing

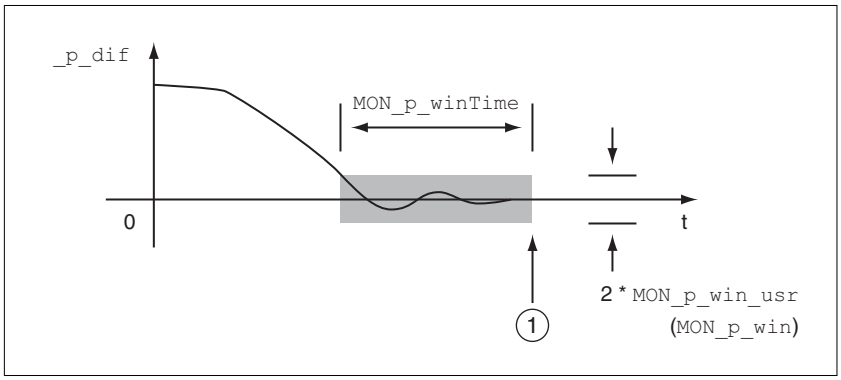

Figure 99: Standstill window

(1) Target position reached (the target position did not exceed the permissible deviation `MON_p_win_usr` during time `MON_p_winTime`).

The parameters `MON_p_win_usr (MON_p_win)` and `MON_p_winTime` specify the size of the window.

The parameter `MON_p_winTout` can be used to set the period of time after which an error is signaled if the standstill window was not reached.

0198441113956, V1.00, 07.2013

Parameter name	Description	Unit Minimum value Factory setting Maximum value	Data type R/W Persistent Expert	Parameter address via field-bus
MON_p_win_usr	Standstill window, permissible control deviation The control deviation for the standstill window time must be within this range for a standstill of the drive to be detected. Processing of the standstill window must be activated via the parameter MON_p_winTime. The minimum value, the factory setting and the maximum value depend on the scaling factor. Changed settings become active immediately.	usr_p 0 16 2147483647	INT32 INT32 R/W per. -	CANopen 3006:40h Modbus 1664
MON_p_win	Standstill window, permissible control deviation The control deviation for the standstill window time must be within this range for a standstill of the drive to be detected. Processing of the standstill window must be activated via the parameter MON_p_winTime. The parameter MON_p_win_usr allows you to enter the value in user-defined units. In increments of 0.0001 revolution. Changed settings become active immediately.	revolution 0.0000 0.0010 3.2767	UINT32 UINT16 R/W per. -	CANopen 6067:0h Modbus 1608
MON_p_winTime	Standstill window, time Value 0: Monitoring of standstill window deactivated Value >0: Time in ms during which the control deviation must be in the standstill window Changed settings become active immediately.	ms 0 0 32767	UINT16 UINT16 R/W per. -	CANopen 6068:0h Modbus 1610
MON_p_winTout	Timeout time for standstill window monitoring Value 0: Timeout monitoring deactivated Value >0: Timeout time in ms Standstill window processing values are set via MON_p_win and MON_p_winTime. Time monitoring starts when the target position (reference position of position controller) is reached or when the profile generator has finished processing. Changed settings become active immediately.	ms 0 0 16000	UINT16 UINT16 R/W per. -	CANopen 3006:26h Modbus 1612

0198441113956, V1.00, 07.2013

8.7.9 Position register

The position register allows you to monitor whether the motor is within a parameterizable position range.

A movement can be monitored using one of 4 methods:

- The motor position is greater than or equal to comparison value A.
- The motor position is less than or equal to comparison value A.
- The motor position is within the range between comparison value A and comparison value B.
- The motor position is outside the range between comparison value A and comparison value B.

Separate channels are available for monitoring.

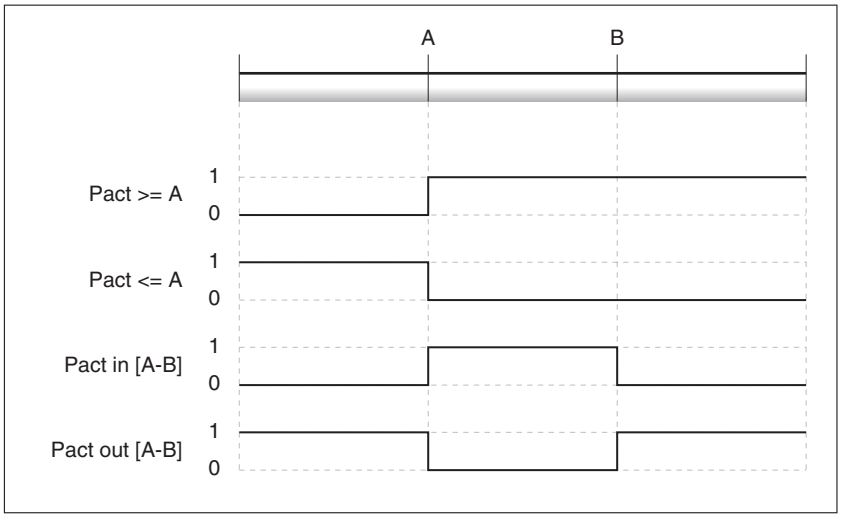

Figure 100: Position register

Number of channels 4 channels are available.

Status messages The status of the position register is available via the parameter `_PosRegStatus`.

Parameter name	Description	Unit Minimum value Factory setting Maximum value	Data type R/W Persistent Expert	Parameter address via field-bus
`_PosRegStatus`	Status of the position register channels Signal state: 0: Comparison criterion not met 1: Comparison criterion met Bit assignments: Bit 0: State of position register channel 1 Bit 1: State of position register channel 2 Bit 2: State of position register channel 3 Bit 3: State of position register channel 4	- - - -	UINT16 UINT16 R/- - -	CANopen 300B:1$_h$ Modbus 2818

In addition, the status is available via signal outputs. In order to read the status via the signal outputs, you must first parameterize the signal output function "Position Register Channel 1","Position Register Channel 2", "Position Register Channel 3" and "Position Register Channel 4", see chapter
"8.5.2 Setting the digital signal inputs and signal outputs".

0198441113956, V1.00, 07.2013

Starting the position registers

The channels of the position registers are started via the following parameters.

Parameter name	Description	Unit Minimum value Factory setting Maximum value	Data type R/W Persistent Expert	Parameter address via field-bus
PosReg1Start	Start/stop of position register channel 1 **0 / Off (keep last state)**: Position Register channel 1 is off and status bit keeps last state **1 / On**: Position Register channel 1 is on **2 / Off (set state 0)**: Position Register channel 1 is off and status bit is set to 0 **3 / Off (set state 1)**: Position Register channel 1 is off and status bit is set to 1 Changed settings become active immediately.	- 0 0 3	UINT16 UINT16 R/W - -	CANopen 300B:2_h Modbus 2820
PosReg2Start	Start/stop of position register channel 2 **0 / Off (keep last state)**: Position Register channel 2 is off and status bit keeps last state **1 / On**: Position Register channel 2 is on **2 / Off (set state 0)**: Position Register channel 2 is off and status bit is set to 0 **3 / Off (set state 1)**: Position Register channel 2 is off and status bit is set to 1 Changed settings become active immediately.	- 0 0 3	UINT16 UINT16 R/W - -	CANopen 300B:3_h Modbus 2822
PosReg3Start	Start/stop of position register channel 3 **0 / Off (keep last state)**: Position Register channel 3 is off and status bit keep last state **1 / On**: Position Register channel 3 is on **2 / Off (set state 0)**: Position Register channel 3 is off and status bit is set to 0 **3 / Off (set state 1)**: Position Register channel 3 is off and status bit is set to 1 Changed settings become active immediately.	- 0 0 3	UINT16 UINT16 R/W - -	CANopen 300B:C_h Modbus 2840
PosReg4Start	Start/stop of position register channel 4 **0 / Off (keep last state)**: Position Register channel 4 is off and status bit keeps last state **1 / On**: Position Register channel 4 is on **2 / Off (set state 0)**: Position Register channel 4 is off and status bit is set to 0 **3 / Off (set state 1)**: Position Register channel 4 is off and status bit is set to 1 Changed settings become active immediately.	- 0 0 3	UINT16 UINT16 R/W - -	CANopen 300B:D_h Modbus 2842

Setting the comparison criterion

The comparison criterion is set via the following parameters.

In the case of the comparison criteria "Pact in" and "Pact out", there is a difference between "basic" and "extended".

- Basic: The movement to be performed remains within the movement range.
- Extended: The movement to be performed can extend beyond the movement range.

0198441113956, V1.00, 07.2013

Parameter name	Description	Unit Minimum value Factory setting Maximum value	Data type R/W Persistent Expert	Parameter address via field-bus
PosReg1Mode	Selection of comparison criterion for position register channel 1 **0 / Pact greater equal A**: Current position is greater than or equal to comparison value A for position register channel 1 **1 / Pact less equal A**: Current position is less than or equal to comparison value A for position register channel 1 **2 / Pact in [A-B] (basic)**: Current position is in the range A-B including limits (basic) **3 / Pact out [A-B] (basic)**: Current position is out of the range A-B excluding limits (basic) **4 / Pact in [A-B] (extended)**: Current position is in the range A-B including limits (extended) **5 / Pact out [A-B] (extended)**: Current position is out of the range A-B excluding limits (extended) Changed settings become active immediately.	- 0 0 5	UINT16 UINT16 R/W per. -	CANopen 300B:4h Modbus 2824
PosReg2Mode	Selection of comparison criterion for position register channel 2 **0 / Pact greater equal A**: Current position is greater than or equal to comparison value A for position register channel 2 **1 / Pact less equal A**: Current position is less than or equal to comparison value A for position register channel 2 **2 / Pact in [A-B] (basic)**: Current position is in the range A-B including limits (basic) **3 / Pact out [A-B] (basic)**: Current position is out of the range A-B excluding limits (basic) **4 / Pact in [A-B] (extended)**: Current position is in the range A-B including limits (extended) **5 / Pact out [A-B] (extended)**: Current position is out of the range A-B excluding limits (extended) Changed settings become active immediately.	- 0 0 5	UINT16 UINT16 R/W per. -	CANopen 300B:5h Modbus 2826

0198441113956, V1.00, 07.2013

Parameter name	Description	Unit Minimum value Factory setting Maximum value	Data type R/W Persistent Expert	Parameter address via field-bus
PosReg3Mode	Selection of comparison criterion for position register channel 3 **0 / Pact greater equal A**: Current position is greater than or equal to comparison value A for position register channel 3 **1 / Pact less equal A**: Current position is less than or equal to comparison value A for position register channel 3 **2 / Pact in [A-B] (basic)**: Current position is in the range A-B including limits (basic) **3 / Pact out [A-B] (basic)**: Current position is out of the range A-B excluding limits (basic) **4 / Pact in [A-B] (extended)**: Current position is in the range A-B including limits (extended) **5 / Pact out [A-B] (extended)**: Current position is out of the range A-B excluding limits (extended) Changed settings become active immediately.	- 0 0 5	UINT16 UINT16 R/W per. -	CANopen 300B:E_h Modbus 2844
PosReg4Mode	Selection of comparison criterion for position register channel 4 **0 / Pact greater equal A**: Current position is greater than or equal to comparison value A for position register channel 4 **1 / Pact less equal A**: Current position is less than or equal to comparison value A for position register channel 4 **2 / Pact in [A-B] (basic)**: Current position is in the range A-B including limits (basic) **3 / Pact out [A-B] (basic)**: Current position is out of the range A-B excluding limits (basic) **4 / Pact in [A-B] (extended)**: Current position is in the range A-B including limits (extended) **5 / Pact out [A-B] (extended)**: Current position is out of the range A-B excluding limits (extended) Changed settings become active immediately.	- 0 0 5	UINT16 UINT16 R/W per. -	CANopen 300B:F_h Modbus 2846

Setting comparison values The comparison values are set via the following parameters.

0198441113956, V1.00, 07.2013

Parameter name	Description	Unit Minimum value Factory setting Maximum value	Data type R/W Persistent Expert	Parameter address via field-bus
PosReg1ValueA	Comparison value A for position register channel 1	usr_p - 0 -	INT32 INT32 R/W per. -	CANopen 300B:8h Modbus 2832
PosReg1ValueB	Comparison value B for position register channel 1	usr_p - 0 -	INT32 INT32 R/W per. -	CANopen 300B:9h Modbus 2834
PosReg2ValueA	Comparison value A for position register channel 2	usr_p - 0 -	INT32 INT32 R/W per. -	CANopen 300B:Ah Modbus 2836
PosReg2ValueB	Comparison value B for position register channel 2	usr_p - 0 -	INT32 INT32 R/W per. -	CANopen 300B:Bh Modbus 2838
PosReg3ValueA	Comparison value A for position register channel 3	usr_p - 0 -	INT32 INT32 R/W per. -	CANopen 300B:12h Modbus 2852
PosReg3ValueB	Comparison value B for position register channel 3	usr_p - 0 -	INT32 INT32 R/W per. -	CANopen 300B:13h Modbus 2854
PosReg4ValueA	Comparison value A for position register channel 4	usr_p - 0 -	INT32 INT32 R/W per. -	CANopen 300B:14h Modbus 2856
PosReg4ValueB	Comparison value B for position register channel 4	usr_p - 0 -	INT32 INT32 R/W per. -	CANopen 300B:15h Modbus 2858

0198441113956, V1.00, 07.2013

8.7.10 Position deviation window

The position deviation window allows you to monitor whether the motor is within a parameterizable position deviation.

The position deviation is the difference between reference position and actual position.

The position deviation window comprises position deviation and monitoring time.

Availability

The position deviation window is available in the following operating modes.

- Jog
- Profile Position
- Homing

Monitoring

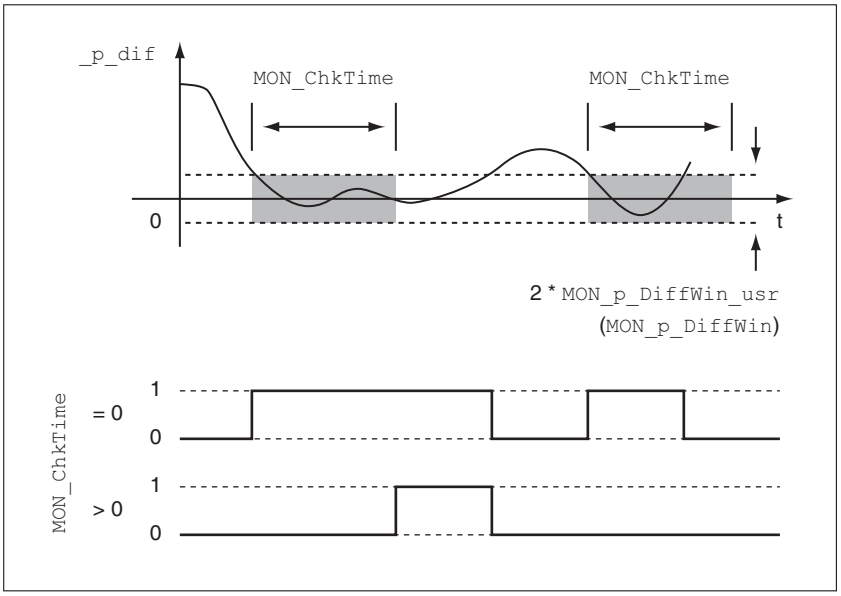

Figure 101: Position deviation window

The parameters `MON_p_DiffWin_usr` (`MON_p_DiffWin`) and `MON_ChkTime` specify the size of the window.

Status indication

The status is available via a signal output or via the fieldbus.

In order to read the status via a signal output, you must first parameterize the signal output function "In Position Deviation Window", see chapter "8.5.2 Setting the digital signal inputs and signal outputs".

In order to read the status via the fieldbus, you must set the parameter `DS402intLim` to the value "In Position Deviation Window", see chapter "8.5.6 Settings of parameter `_DCOMstatus`".

The parameter `MON_ChkTime` acts on the parameters `MON_p_DiffWin_usr` (`MON_p_DiffWin`), `MON_v_DiffWin`, `MON_v_Threshold` and `MON_I_Threshold`.

0198441113956, V1.00, 07.2013

Parameter name	Description	Unit Minimum value Factory setting Maximum value	Data type R/W Persistent Expert	Parameter address via field-bus
MON_p_DiffWin_usr	Monitoring of position deviation The system checks whether the drive is within the defined deviation during the period set with MON_ChkTime. The status can be output via a parameterizable output. The minimum value, the factory setting and the maximum value depend on the scaling factor. Changed settings become active immediately.	usr_p 0 16 2147483647	INT32 INT32 R/W per. -	CANopen 3006:3F$_h$ Modbus 1662
MON_p_DiffWin	Monitoring of position deviation The system checks whether the drive is within the defined deviation during the period set with MON_ChkTime. The status can be output via a parameterizable output. The parameter MON_p_DiffWin_usr allows you to enter the value in user-defined units. In increments of 0.0001 revolution. Changed settings become active immediately.	revolution 0.0000 0.0010 0.9999	UINT16 UINT16 R/W per. -	CANopen 3006:19$_h$ Modbus 1586
MON_ChkTime	Monitoring of time window Adjustment of a time for monitoring of position deviation, speed deviation, speed value and current value. If the monitored value is in the permissible range during the adjusted time, the monitoring function delivers a positive result. The status can be output via a parameterizable output. Changed settings become active immediately.	ms 0 0 9999	UINT16 UINT16 R/W per. -	CANopen 3006:1D$_h$ Modbus 1594

0198441113956, V1.00, 07.2013

8.7.11 Velocity deviation window

The velocity deviation window allows you to monitor whether the motor is within a parameterizable velocity deviation.

The velocity deviation is the difference between the reference velocity and the actual velocity.

The velocity deviation window comprises velocity deviation and monitoring time.

Availability

The velocity deviation window is available in the following operating modes.

- Jog
- Profile Velocity
- Profile Position
- Homing

Monitoring

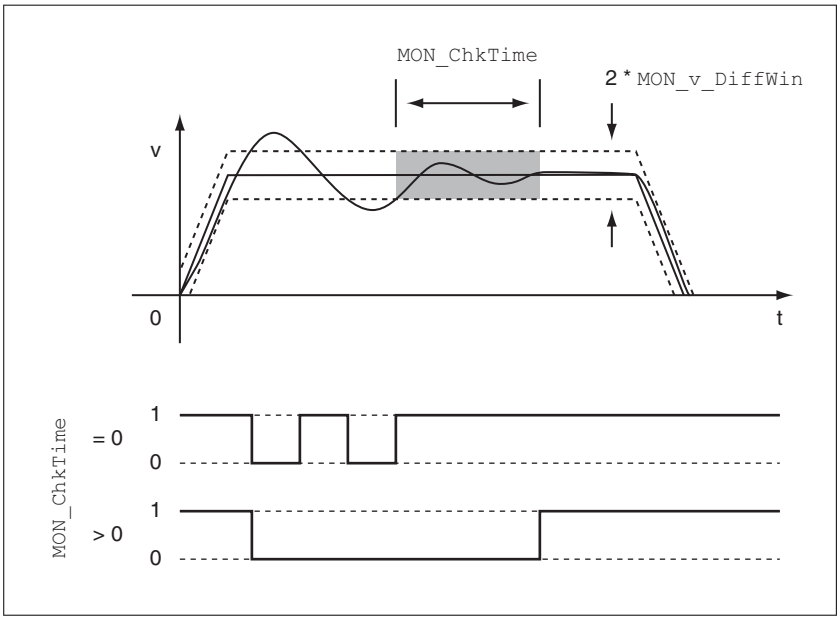

Figure 102: Velocity deviation window

The parameters `MON_v_DiffWin` and `MON_ChkTime` specify the size of the window.

Status indication

The status is available via a signal output or via the fieldbus.

In order to read the status via a signal output, you must first parameterize the signal output function "In Velocity Deviation Window", see chapter "8.5.2 Setting the digital signal inputs and signal outputs".

In order to read the status via the fieldbus, you must set the parameter `DS402intLim` to the value "In Velocity Deviation Window", see chapter "8.5.6 Settings of parameter `_DCOMstatus`".

The parameter `MON_ChkTime` acts on the parameters `MON_p_DiffWin_usr` (`MON_p_DiffWin`), `MON_v_DiffWin`, `MON_v_Threshold` and `MON_I_Threshold`.

0198441113956, V1.00, 07.2013

Parameter name	Description	Unit Minimum value Factory setting Maximum value	Data type R/W Persistent Expert	Parameter address via field-bus
MON_v_DiffWin	Monitoring of velocity deviation The system checks whether the drive is within the defined deviation during the period set with MON_ChkTime. The status can be output via a parameterizable output. Changed settings become active immediately.	usr_v 1 10 2147483647	UINT32 UINT32 R/W per. -	CANopen 3006:1A$_h$ Modbus 1588
MON_ChkTime	Monitoring of time window Adjustment of a time for monitoring of position deviation, speed deviation, speed value and current value. If the monitored value is in the permissible range during the adjusted time, the monitoring function delivers a positive result. The status can be output via a parameterizable output. Changed settings become active immediately.	ms 0 0 9999	UINT16 UINT16 R/W per. -	CANopen 3006:1D$_h$ Modbus 1594

0198441113956, V1.00, 07.2013

8.7.12 Velocity threshold value

The velocity threshold value allows you to monitor whether the actual velocity is below a parameterizable velocity value.

The velocity threshold value comprises the velocity and the monitoring time.

Monitoring

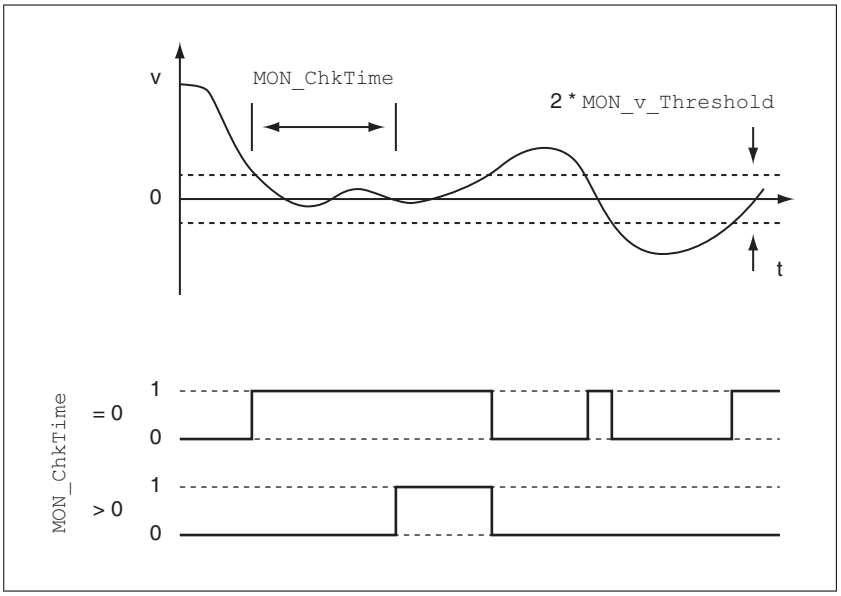

Figure 103: Velocity threshold value

The parameters `MON_v_Threshold` and `MON_ChkTime` specify the size of the window.

Status indication

The status is available via a signal output or via the fieldbus.

In order to read the status via a signal output, you must first parameterize the signal output function "Velocity Below Threshold", see chapter "8.5.2 Setting the digital signal inputs and signal outputs".

In order to read the status via the fieldbus, you must set the parameter `DS402intLim` to the value "Velocity Below Threshold", see chapter "8.5.6 Settings of parameter `_DCOMstatus`".

The parameter `MON_ChkTime` acts on the parameters `MON_p_DiffWin_usr` (`MON_p_DiffWin`), `MON_v_DiffWin`, `MON_v_Threshold` and `MON_I_Threshold`.

0198441113956, V1.00, 07.2013

Parameter name	Description	Unit Minimum value Factory setting Maximum value	Data type R/W Persistent Expert	Parameter address via field-bus
MON_v_Threshold	Monitoring of velocity threshold The system checks whether the drive is below the defined value during the period set with MON_ChkTime. The status can be output via a parameterizable output. Changed settings become active immediately.	usr_v 1 10 2147483647	UINT32 UINT32 R/W per. -	CANopen 3006:1B$_h$ Modbus 1590
MON_ChkTime	Monitoring of time window Adjustment of a time for monitoring of position deviation, speed deviation, speed value and current value. If the monitored value is in the permissible range during the adjusted time, the monitoring function delivers a positive result. The status can be output via a parameterizable output. Changed settings become active immediately.	ms 0 0 9999	UINT16 UINT16 R/W per. -	CANopen 3006:1D$_h$ Modbus 1594

0198441113956, V1.00, 07.2013

8.7.13 Current threshold value

The current threshold value allows you to monitor whether the current motor current is below a parameterizable current value.

The current threshold value comprises the current value and the monitoring time.

Monitoring

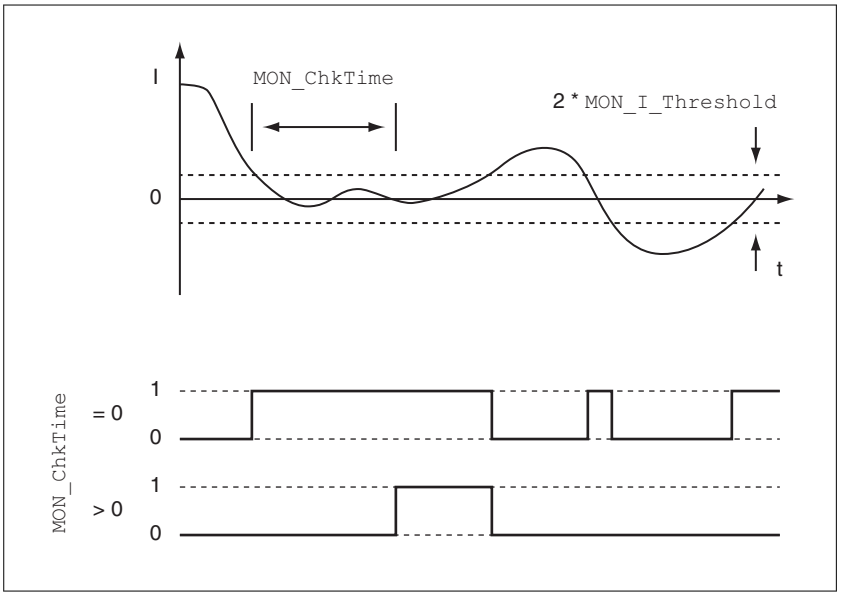

Figure 104: Current threshold value

The parameters `MON_I_Threshold` and `MON_ChkTime` specify the size of the window.

Status indication

The status is available via a signal output or via the fieldbus.

In order to read the status via a signal output, you must first parameterize the signal output function "Current Below Threshold", see chapter "8.5.2 Setting the digital signal inputs and signal outputs".

In order to read the status via the fieldbus, you must set the parameter `DS402intLim` to the value "Current Below Threshold", see chapter "8.5.6 Settings of parameter `_DCOMstatus`".

The parameter `MON_ChkTime` acts on the parameters `MON_p_DiffWin_usr` (`MON_p_DiffWin`), `MON_v_DiffWin`, `MON_v_Threshold` and `MON_I_Threshold`.

0198441113956, V1.00, 07.2013

Parameter name	Description	Unit Minimum value Factory setting Maximum value	Data type R/W Persistent Expert	Parameter address via field-bus
MON_I_Threshold	Monitoring of current threshold The system checks whether the drive is below the defined value during the period set with MON_ChkTime. The status can be output via a parameterizable output. The parameter _Iq_act_rms is used as comparison value. In increments of 0.01 A_{rms}. Changed settings become active immediately.	A_{rms} 0.00 0.20 300.00	UINT16 UINT16 R/W per. -	CANopen 3006:1C_h Modbus 1592
MON_ChkTime	Monitoring of time window Adjustment of a time for monitoring of position deviation, speed deviation, speed value and current value. If the monitored value is in the permissible range during the adjusted time, the monitoring function delivers a positive result. The status can be output via a parameterizable output. Changed settings become active immediately.	ms 0 0 9999	UINT16 UINT16 R/W per. -	CANopen 3006:1D_h Modbus 1594

0198441113956, V1.00, 07.2013

8.8 Functions for monitoring internal device signals

8.8.1 Temperature monitoring

The power stage temperature and the motor temperature are monitored internally.

Power stage temperature

The parameters `_PS_T_current` and `_PS_T_max` can be used to read the current temperature and the maximum temperature of the power stage.

The parameter `_PS_T_warn` contains as threshold value for a warning.

Parameter name	Description	Unit Minimum value Factory setting Maximum value	Data type R/W Persistent Expert	Parameter address via field-bus
`_PS_T_current`	Current power stage temperature	°C - - -	INT16 INT16 R/- - -	CANopen 301C:10$_h$ Modbus 7200
`_PS_T_warn`	Temperature warning threshold of power stage	°C - - -	INT16 INT16 R/- per. -	CANopen 3010:6$_h$ Modbus 4108
`_PS_T_max`	Maximum power stage temperature	°C - - -	INT16 INT16 R/- per. -	CANopen 3010:7$_h$ Modbus 4110

Motor temperature

The parameters `_M_T_current` and `_M_T_max` can be used to read the current temperature and the maximum temperature of the motor.

Parameter name	Description	Unit Minimum value Factory setting Maximum value	Data type R/W Persistent Expert	Parameter address via field-bus
`_M_T_max`	Maximum temperature of motor	°C - - -	INT16 INT16 R/- - -	CANopen 300D:10$_h$ Modbus 3360

0198441113956, V1.00, 07.2013

8.8.2 Monitoring load and overload (I^2t monitoring)

The load is the thermal load on the power stage, the motor and the braking resistor.

Load and overload on the individual components are monitored internally; the values can be read by means of parameters.

Overload starts at a load value of 100 %.

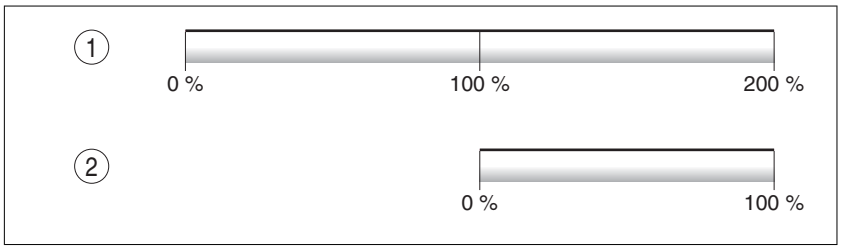

Figure 105: Load and overload

(1) Load
(2) Overload

Load monitoring The current load can be read using the following parameters:

Parameter name	Description	Unit Minimum value Factory setting Maximum value	Data type R/W Persistent Expert	Parameter address via fieldbus
`_PS_load`	Current load of power stage	% - - -	INT16 INT16 R/- - -	CANopen 301C:17_h Modbus 7214
`_M_load`	Current load of motor	% - - -	INT16 INT16 R/- - -	CANopen 301C:$1A_h$ Modbus 7220
`_RES_load`	Current load of braking resistor The braking resistor set via parameter RES-int_ext is monitored.	% - - -	INT16 INT16 R/- - -	CANopen 301C:14_h Modbus 7208

0198441113956, V1.00, 07.2013

Overload monitoring

In the case of 100 % overload of the power stage or the motor), the current is limited internally. In the case of 100 % overload of the braking resistor, the braking resistor is switched off.

The current overload and the peak value can be read using the following parameters:

Parameter name	Description	Unit Minimum value Factory setting Maximum value	Data type R/W Persistent Expert	Parameter address via fieldbus
`_PS_overload`	Current overload of power stage	% - - -	INT16 INT16 R/- - -	CANopen 301C:24$_h$ Modbus 7240
`_PS_maxoverload`	Maximum value of overload of power stage Maximum overload of power stage during the last 10 seconds.	% - - -	INT16 INT16 R/- - -	CANopen 301C:18$_h$ Modbus 7216
`_M_overload`	Current overload of motor (I2t)	% - - -	INT16 INT16 R/- - -	CANopen 301C:19$_h$ Modbus 7218
`_M_maxoverload`	Maximum value of overload of motor Maximum overload of motor during the last 10 seconds.	% - - -	INT16 INT16 R/- - -	CANopen 301C:1B$_h$ Modbus 7222
`_RES_overload`	Current overload of braking resistor (I2t) The braking resistor set via parameter RES-int_ext is monitored.	% - - -	INT16 INT16 R/- - -	CANopen 301C:13$_h$ Modbus 7206
`_RES_maxoverload`	Maximum value of overload of braking resistor Maximum overload of braking resistor during the last 10 seconds. The braking resistor set via parameter RES-int_ext is monitored.	% - - -	INT16 INT16 R/- - -	CANopen 301C:15$_h$ Modbus 7210

0198441113956, V1.00, 07.2013

8.8.3 Commutation monitoring

⚠ WARNING

UNEXPECTED MOVEMENT

The risk of unexpected movements increases if monitoring functions are deactivated.

- Use the monitoring functions.

Failure to follow these instructions can result in death, serious injury or equipment damage.

The device checks the plausibility of motor acceleration and effective motor torque in order to recognize uncontrolled movements and to suppress them if required. The monitoring function is referred to as commutation monitoring.

If the motor accelerates for a period of more than 5 to 10 ms even though the drive control decelerates the motor with the maximum current set, commutation monitoring signals an uncontrolled motor movement.

The parameter `MON_commutat` lets you deactivate commutation monitoring.

Parameter name	Description	Unit Minimum value Factory setting Maximum value	Data type R/W Persistent Expert	Parameter address via field-bus
`MON_commutat`	Commutation monitoring **0 / Off**: Commutation monitoring off **1 / On**: Commutation monitoring on Setting can only be changed if power stage is disabled. Changed settings become active the next time the power stage is enabled.	- 0 1 1	UINT16 UINT16 R/W per. -	CANopen 3005:5$_h$ Modbus 1290

0198441113956, V1.00, 07.2013

8.8.4 Monitoring of mains phases

NOTICE

DESTRUCTION CAUSED BY MISSING MAINS PHASE

If a mains phase for a three-phase product misses and the monitoring function is deactivated, this can cause overload and destruction of the product.

- Use the monitoring functions.
- Do not operate the product if a mains phase misses.

Failure to follow these instructions can result in equipment damage.

The mains phases are monitored internally.

The parameter `ErrorResp_Flt_AC` lets you set the error response to a missing mains phase for three-phase devices.

Parameter name	Description	Unit Minimum value Factory setting Maximum value	Data type R/W Persistent Expert	Parameter address via field-bus
`ErrorResp_Flt_AC`	Error response to missing mains phase **1 / Error Class 1**: Error class 1 **2 / Error Class 2**: Error class 2 **3 / Error Class 3**: Error class 3 Setting can only be changed if power stage is disabled. Changed settings become active the next time the power stage is enabled.	- 1 2 3	UINT16 UINT16 R/W per. -	CANopen 3005:A_h Modbus 1300

If the product is supplied via the DC bus, mains phase monitoring must be set to the mains voltage used.

The type of main phase monitoring is set by means of the parameter `MON_MainsVolt`.

0198441113956, V1.00, 07.2013

Parameter name	Description	Unit Minimum value Factory setting Maximum value	Data type R/W Persistent Expert	Parameter address via field-bus
MON_MainsVolt	Detection and monitoring of mains phases **0 / Automatic Mains Detection**: Automatic detection and monitoring of mains voltage **3 / Mains 1~230 V / 3~480 V**: Mains voltage 230 V (single-phase) or 480 V (three phases) **4 / Mains 1~115 V / 3~208 V**: Mains voltage 115 V (single-phase) or 208 V (three phases) Value 0: As soon as a mains voltage detected, the device automatically checks whether the mains voltage is 115 V or 230 V in the case of single-phase devices or 208 V or 400/480 V in the case of three-phase devices. Values 3 ... 4: If the mains voltage is not detected properly during start-up, the mains voltage to be used can be selected manually. Setting can only be changed if power stage is disabled. Changed settings become active the next time the power stage is enabled.	- 0 0 4	UINT16 UINT16 R/W per. expert	CANopen 3005:F_h Modbus 1310

0198441113956, V1.00, 07.2013

8.8.5 Ground fault monitoring

NOTICE

DESTRUCTION CAUSED BY GROUND FAULTS

If the monitoring function is deactivated, the product may be destroyed by a ground fault.

- Use the monitoring functions.
- Avoid ground faults by wiring the product properly.

Failure to follow these instructions can result in equipment damage.

When the power stage is enabled, the device monitors the motor phases for ground faults.

A ground fault of one or more motor phases is detected. A ground fault of the DC bus or the braking resistor is not detected.

Parameter name	Description	Unit Minimum value Factory setting Maximum value	Data type R/W Persistent Expert	Parameter address via field-bus
`MON_GroundFault`	Ground fault monitoring **0 / Off**: Ground fault monitoring off **1 / On**: Ground fault monitoring on In exceptional cases, deactivation may be necessary, for example: - Long motor cables Deactivate ground fault monitoring if it responds in an unwanted way. Changed settings become active the next time the product is switched on.	- 0 1 1	UINT16 UINT16 R/W per. expert	CANopen 3005:10h Modbus 1312

0198441113956, V1.00, 07.2013

9 Examples

9

General information The examples show some typical applications of the product. The examples are intended to provide an overview; they are not exhaustive wiring plans.

Using the safety functions integrated in this product requires careful planning. See chapter "5.9 Safety function STO ("Safe Torque Off")", page 69 for additional information.

Wiring example 1 The following illustration shows a wiring example with:

Logic type	Signal power supply	Safety function STO	Miscellaneous
1 (for source outputs) [1]	Internal	-	I/O module with industrial connectors [2] without safety function STO

1) See "5.10 Logic type".
2) See "6.3.3.1 Overview I/O module with industrial connectors".

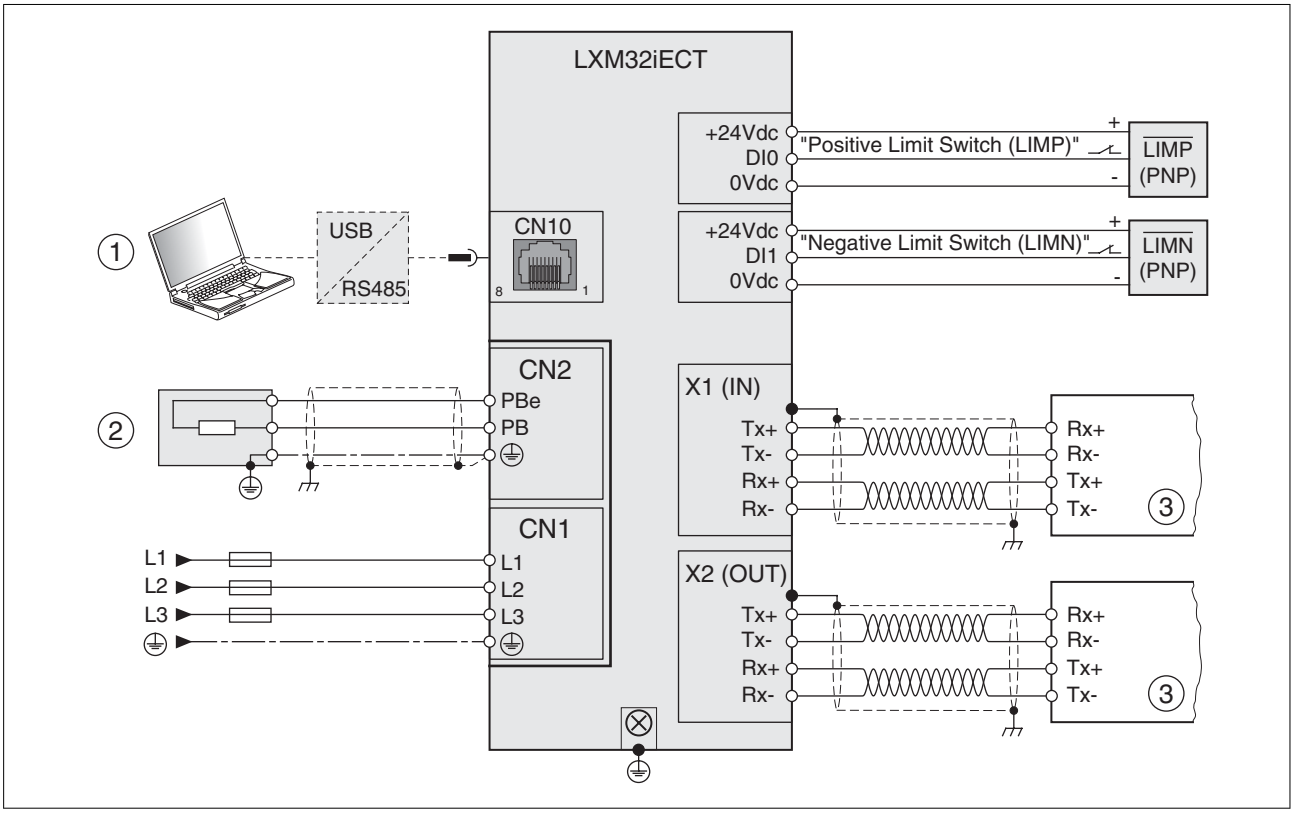

1	Commissioning accessories	5	-
2	Standard braking resistor or external braking resistor	6	-
3	Fieldbus device	7	-
4	-	-	-

0198441113956, V1.00, 07.2013

Wiring example 2 The following illustration shows a wiring example with:

Logic type	Signal power supply	Safety function STO	Miscellaneous
1 (for source outputs) [1]	Internal	Required	I/O module with spring terminals [2]

1) See "5.10 Logic type".
2) See "6.3.4.2 Overview I/O module with spring terminals".

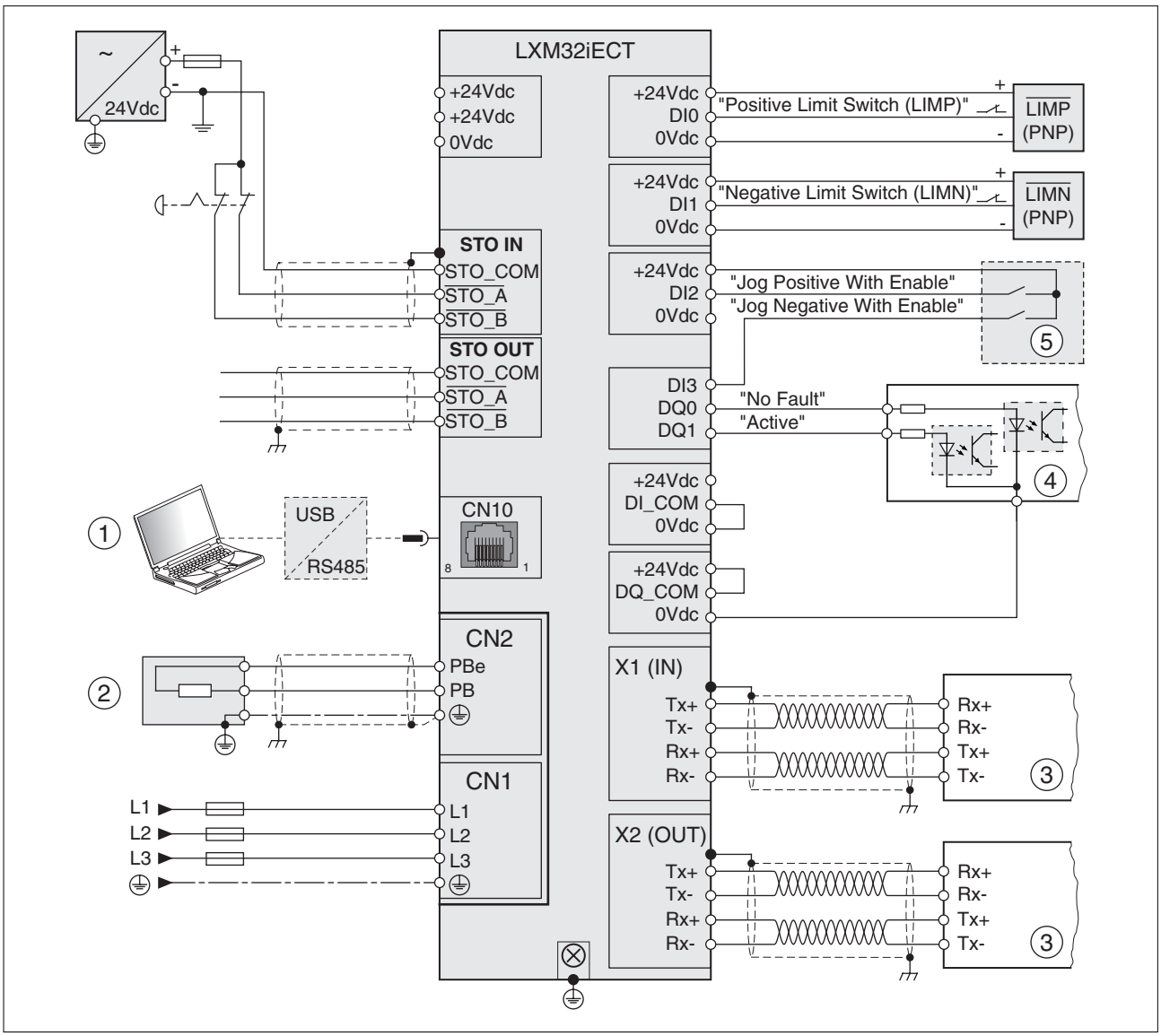

1	Commissioning accessories	5	"Test box" for commissioning
2	Standard braking resistor or external braking resistor	6	-
3	Fieldbus device	7	-
4	Signal lights or inputs of the PLC	-	-

0198441113956, V1.00, 07.2013

Wiring example 3 The following illustration shows a wiring example with:

Logic type	Signal power supply	Safety function STO	Miscellaneous
2 (for sink outputs) [1]	Internal	Required	I/O module with spring terminals [2]

1) See "5.10 Logic type".
2) See "6.3.4.2 Overview I/O module with spring terminals".

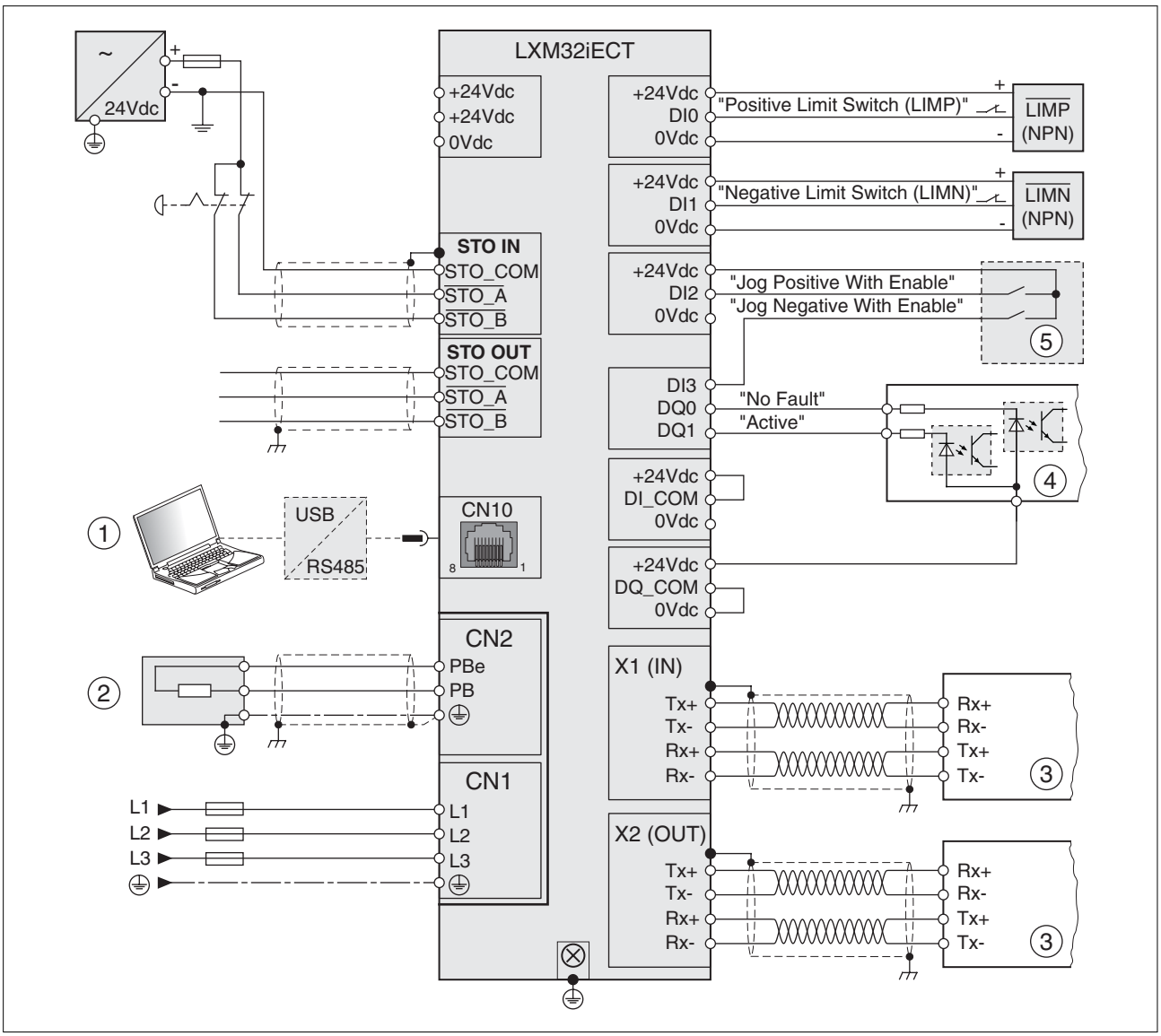

1	Commissioning accessories	5	"Test box" for commissioning
2	Standard braking resistor or external braking resistor	6	-
3	Fieldbus device	7	-
4	Signal lights or inputs of the PLC	-	-

0198441113956, V1.00, 07.2013

Wiring example 4 The following illustration shows a wiring example with:

Logic type	Signal power supply	Safety function STO	Miscellaneous
1 (for source outputs) [1]	External	Deactivated	I/O module with spring terminals [2] / / digital inputs and digital outputs via PLC

1) See "5.10 Logic type".
2) See "6.3.4.2 Overview I/O module with spring terminals".

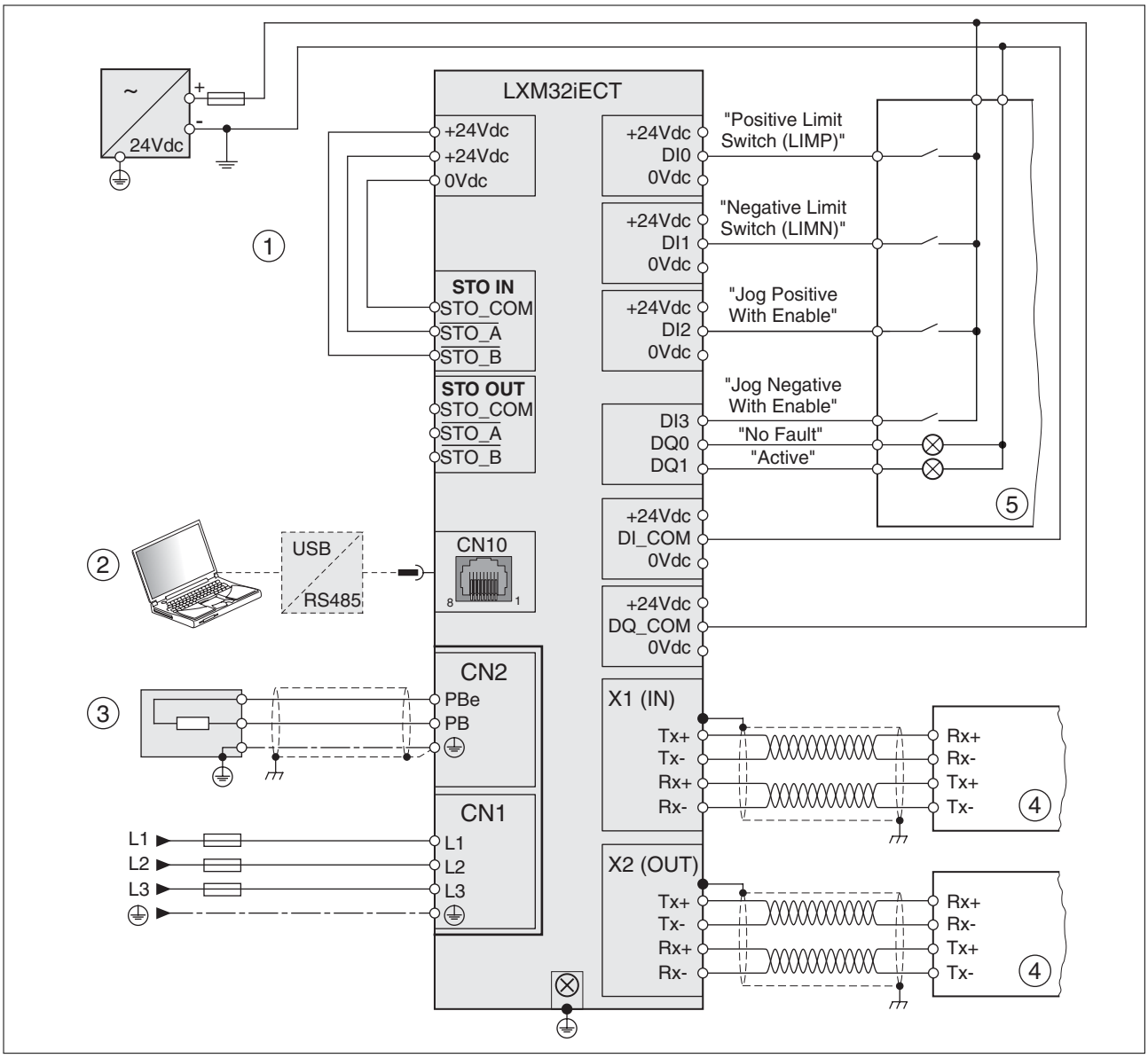

1	Safety function STO deactivated	5	Signal lights / PLC
2	Commissioning accessories	6	-
3	Standard braking resistor or external braking resistor	7	-
4	Fieldbus device	-	-

0198441113956, V1.00, 07.2013

Wiring example 5 The following illustration shows a wiring example with:

Logic type	Signal power supply	Safety function STO	Miscellaneous
2 (for sink outputs) [1]	External	Deactivated	I/O module with spring terminals [2] / / digital inputs and digital outputs via PLC

1) See "5.10 Logic type".
2) See "6.3.4.2 Overview I/O module with spring terminals".

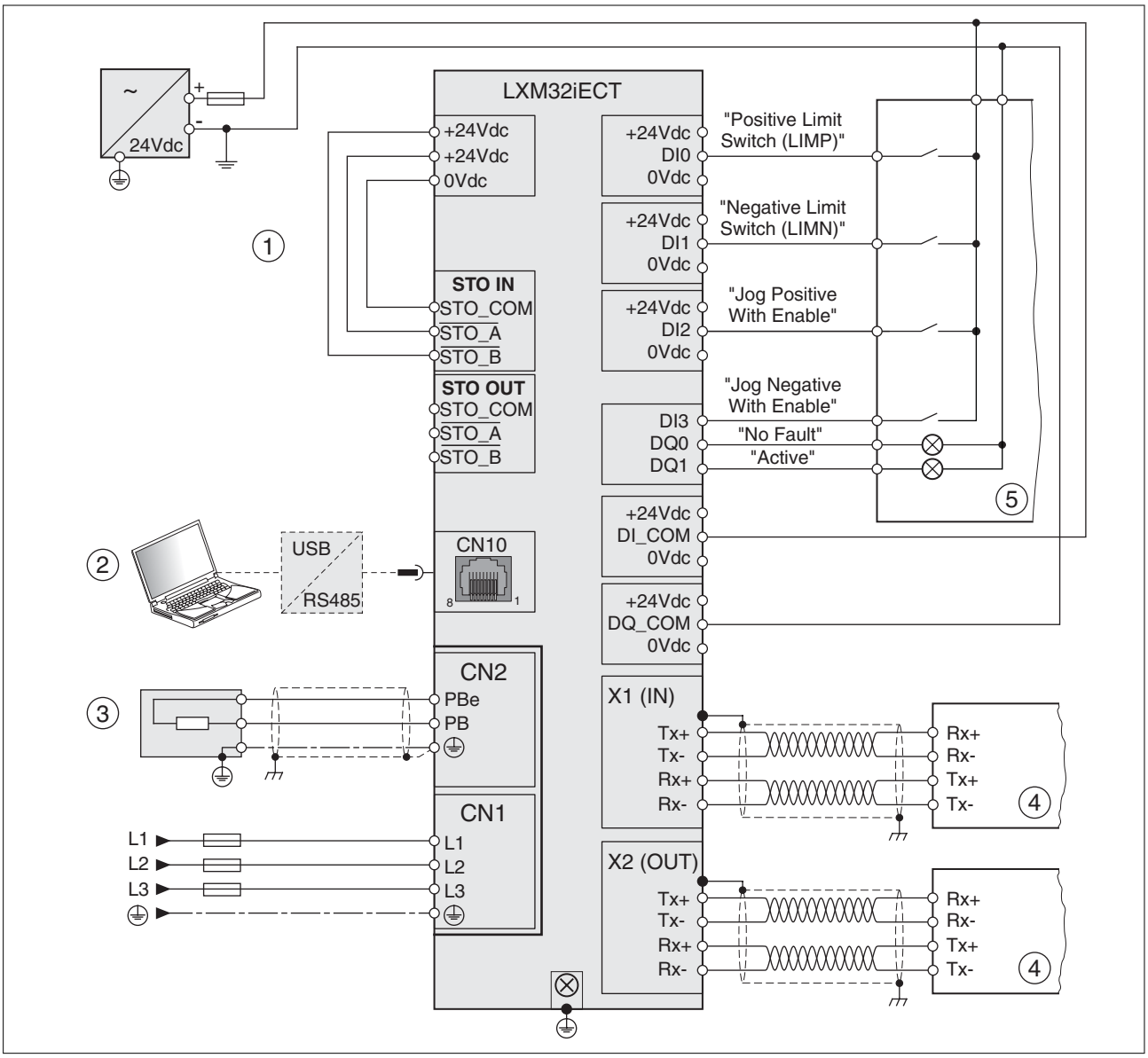

1	Safety function STO deactivated	5	Signal lights / PLC
2	Commissioning accessories	6	-
3	Standard braking resistor or external braking resistor	7	-
4	Fieldbus device	-	-

0198441113956, V1.00, 07.2013

10 Diagnostics and troubleshooting

10

This chapter describes the various types of diagnostics and provides troubleshooting assistance.

Diagnostics via LEDs

"10.1 Diagnostics via LEDs"
"10.1.1 Fieldbus status LEDs"
"10.1.2 Operating state LEDs"
"10.1.3 Memory card LEDs"
"10.1.4 DC bus LED"

Diagnostics via signal outputs

"10.2 Diagnostics via signal outputs"

Diagnostics via the fieldbus

"10.3 Diagnostics via the fieldbus"
"10.3.1 EtherCAT state machine"

Warnings and errors

"10.4 Warnings and errors"
"10.4.1 Indicating warnings and errors via the commissioning software"
"10.4.2 Indicating warnings and errors via the signal outputs"
"10.4.3 Indicating warnings and errors via the fieldbus"

Table of warnings and errors by range

"10.5 Table of warnings and errors by range"

0198441113956, V1.00, 07.2013

10.1 Diagnostics via LEDs

The following illustration provides an overview of the diagnostics LEDs.

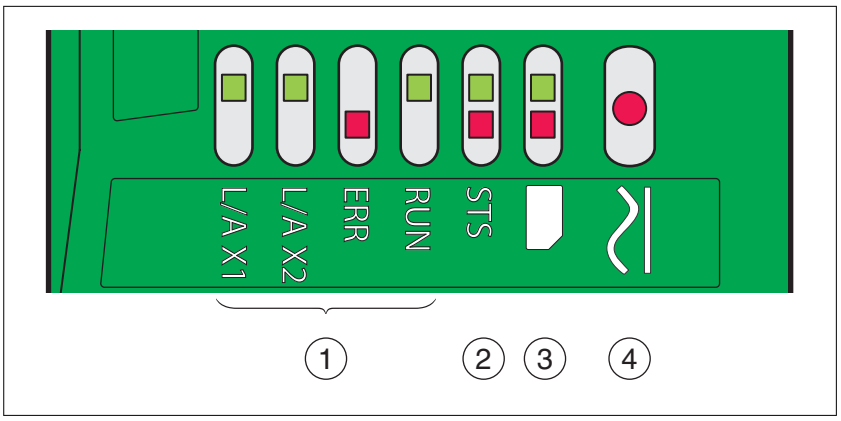

Figure 106: Overview diagnostics LEDs

(1) "10.1.1 Fieldbus status LEDs"
(2) "10.1.2 Operating state LEDs"
(3) "10.1.3 Memory card LEDs"
(4) "10.1.4 DC bus LED"

0198441113956, V1.00, 07.2013

10.1.1 Fieldbus status LEDs

The fieldbus status LEDs visualize the status of the fieldbus.

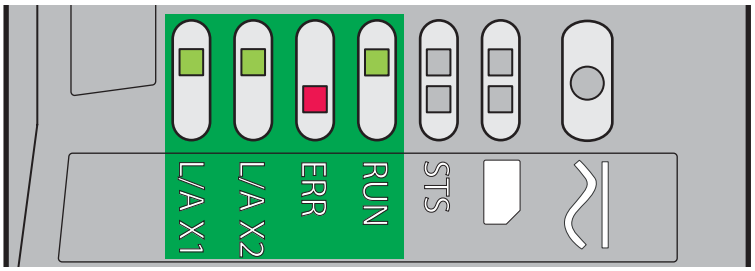

Figure 107: Fieldbus status LEDs

LED L/A X1

Status	Meaning
Off	No link
On	Link, no activity
Flickering	Link, activity

LED L/A X2

Status	Meaning
Off	No link
On	Link, no activity
Flickering	Link, activity

LED ERR

Status	Meaning
Double flash	Watchdog timeout
Single flash	Local error (such as synchronization error)
Blinking	Invalid configuration
Off	No error

LED RUN

Status	Meaning
Off	EtherCAT state INIT
Blinking	EtherCAT state PRE-OPERATIONAL
Single flash	EtherCAT state SAFE-OPERATIONAL
On	EtherCAT state OPERATIONAL

0198441113956, V1.00, 07.2013

Meaning of the LED signals The table below shows the meaning of the LED signals.

LED	Meaning
Flickering	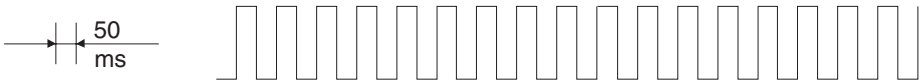
Blinking	
Single flash	
Double flash	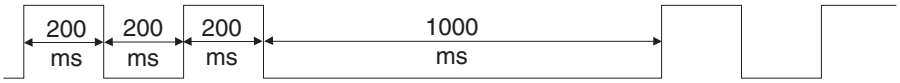
Triple flash	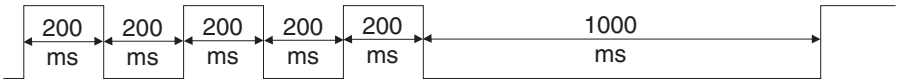

0198441113956, V1.00, 07.2013

10.1.2 Operating state LEDs

The operating state LEDs show the current operating state.

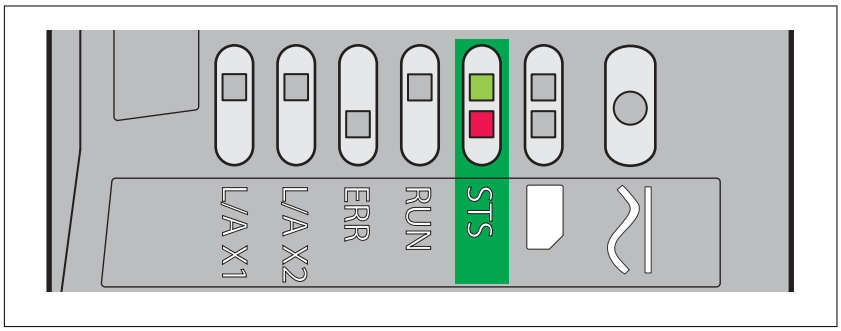

Figure 108: Operating state LEDs

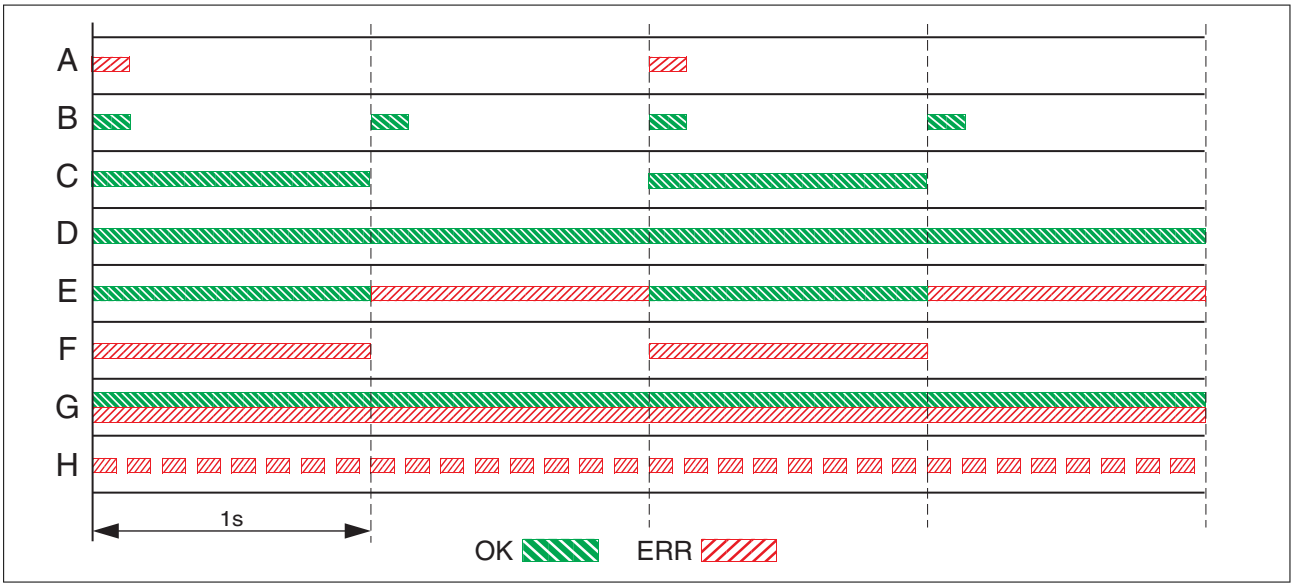

Figure 109: Operating state LEDs

(A) **1** Start and **2** Not Ready To Switch On
(B) **3** Switch On Disabled
(C) **4** Ready To Switch On and **5** Switched On
(D) **6** Operation Enabled
(E) **7** Quick Stop Active and **8** Fault Reaction Active
(F) **9** Fault
(G) Firmware not available
(H) Internal error

0198441113956, V1.00, 07.2013

10.1.3 Memory card LEDs

The memory card LEDs show the status of the memory card.

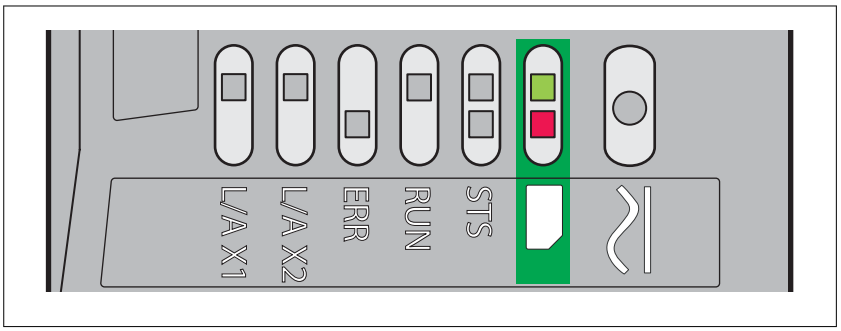

Figure 110: Memory card LEDs

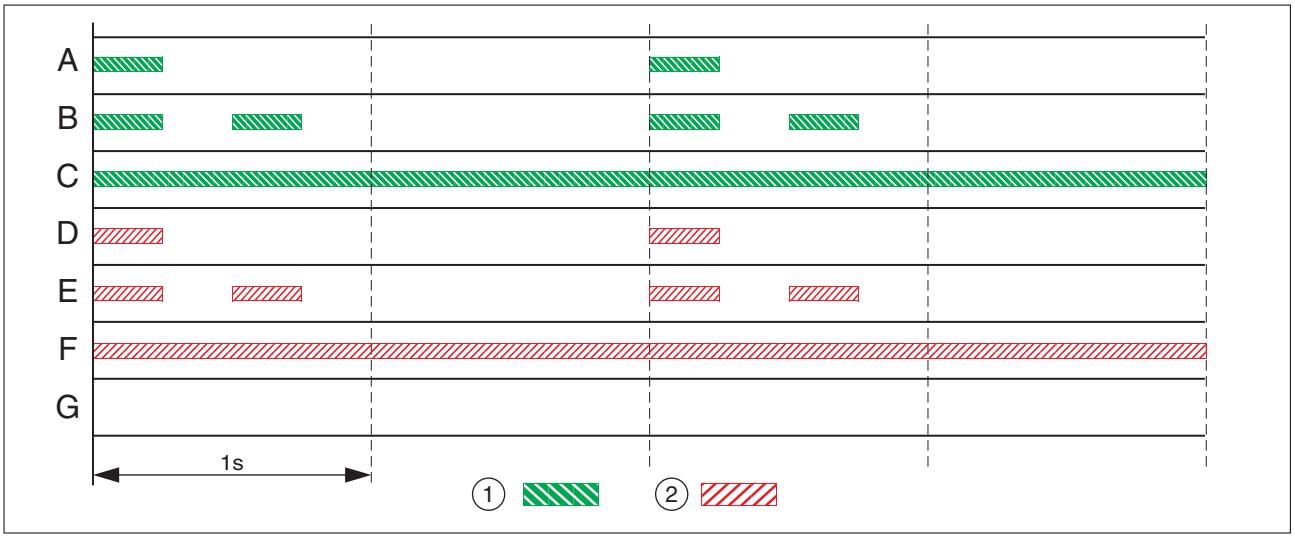

Figure 111: Memory card LEDs

(1)	LED green
(2)	LED red
(A)	The parameter values stored in the device and the contents of the memory card are different. The contents of the memory card is transferred to the device.
(B)	The memory card is empty. The configuration of the device is transferred to the memory card.
(C)	The parameter values stored in the device and the contents of the memory card are identical.
(D)	The memory card is write-protected.
(E)	An error was detected during data transfer. Check the error memory of the device.
(F)	Data on the memory card does not match the device or is damaged.
(G)	No memory card detected. Switch off the power supply. Verify that the memory card has been properly inserted (contacts, slanted corner).

0198441113956, V1.00, 07.2013

10.1.4 DC bus LED

The DC bus LED shows the status of the DC bus.

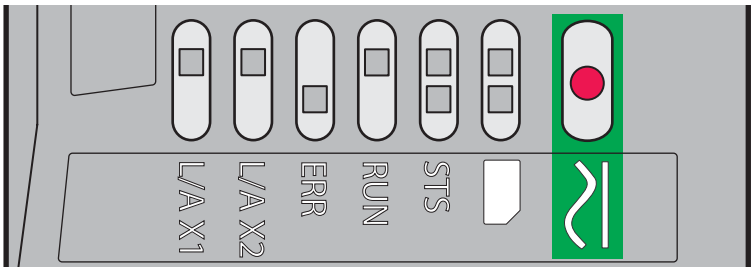

Figure 112: DC bus LED

LED

Status	Meaning
On	Voltage at DC bus.
Off	Undervoltage. The DC bus LED is not an indicator of the absence of DC bus voltage. Observe the information provided in chapter "2.4 Basic information".

0198441113956, V1.00, 07.2013

10.2 Diagnostics via signal outputs

Information on the operating state is available via the the signal outputs. The table below provides an overview.

Operating state	**"No fault"** 1)	**"Active"** 2)
1 Start	0	0
2 Not Ready To Switch On	0	0
3 Switch On Disabled	0	0
4 Ready To Switch On	1	0
5 Switched On	1	0
6 Operation Enabled	1	1
7 Quick Stop Active	0	0
8 Fault Reaction Active	0	0
9 Fault	0	0

1) The signal output function is factory setting for `DQ0`
2) The signal output function is the factory setting for `DQ1`

0198441113956, V1.00, 07.2013

10.3 Diagnostics via the fieldbus

Asynchronous and synchronous errors

Asynchronous errors are signaled by the product without a request.
Example of an asynchronous error: Power stage overtemperature.

Synchronous errors are errors that are detected in response to an incorrect request.
Example of a synchronous error: An invalid parameter value is transmitted to the product. In response, the product signals an error.

Parameter `DCOMstatus`

The parameter `DCOMstatus` is a part of the process data communication. The parameter `DCOMstatus` is transmitted asynchronously and in an event-driven way whenever the status information changes.

In the case of a warning, bit 7 is set in the parameter `DCOMstatus`.

In the case of an error, bit 13 is set in the parameter `DCOMstatus`.

Parameter name	Description	Unit Minimum value Factory setting Maximum value	Data type R/W Persistent Expert	Parameter address via fieldbus
`_DCOMstatus`	DriveCom status word Bit assignments: Bits 0 ... 3: Status bits Bit 4: Voltage enabled Bits 5 ... 6: Status bits Bit 7: Warning Bit 8: HALT request active Bit 9: Remote Bit 10: Target reached Bit 11: Assignment can be set via parameter DS402intLim Bit 12: Operating mode-specific Bit 13: x_err Bit 14: x_end Bit 15: ref_ok	- - - -	UINT16 UINT16 R/- - -	CANopen 6041:0_h Modbus 6916

Error bits

The parameters `_WarnLatched` and `_SigLatched` contain information on warnings and errors.

The error bits of the warnings can be read using the parameter `_WarnLatched`.

The error bits of the errors can be read using the parameter `_SigLatched`.

0198441113956, V1.00, 07.2013

Parameter name	Description	Unit Minimum value Factory setting Maximum value	Data type R/W Persistent Expert	Parameter address via fieldbus
_WarnLatched	Saved warnings, bit-coded Saved warning bits are deleted in the case of a Fault Reset. Bits 10, 13 are deleted automatically. Signal state: 0: Not activated 1: Activated Bit assignments: Bit 0: General warning Bit 1: Reserved Bit 2: Out of range (SW limit switches, tuning) Bit 3: Reserved Bit 4: Active operating mode Bit 5: Commissioning interface (RS485) Bit 6: Integrated fieldbus Bit 7: Reserved Bit 8: Following warning limit reached Bit 9: Reserved Bit 10: Inputs STO_A and/or STO_B Bit 11: Reserved Bit 12: Reserved Bit 13: Low voltage DC bus or mains phase missing Bit 14: Reserved Bit 15: Reserved Bit 16: Integrated encoder interface Bit 17: Temperature of motor high Bit 18: Temperature of power stage high Bit 19: Reserved Bit 20: Memory card Bit 21: Optional fieldbus module Bit 22: Optional encoder module Bit 23: Optional safety module eSM or module IOM1 Bit 24: Reserved Bit 25: Reserved Bit 26: Reserved Bit 27: Reserved Bit 28: Reserved Bit 29: Braking resistor overload (I^2t) Bit 30: Power stage overload (I^2t) Bit 31: Motor overload (I^2t) Monitoring functions are product-dependent.	- - - -	UINT32 UINT32 R/- - -	CANopen 301C:C_h Modbus 7192

0198441113956, V1.00, 07.2013

Parameter name	Description	Unit Minimum value Factory setting Maximum value	Data type R/W Persistent Expert	Parameter address via fieldbus
_SigLatched	Saved status of monitoring signals Signal state: 0: Not activated 1: Activated Bit assignments: Bit 0: General error Bit 1: Hardware limit switches (LIMP/LIMN/REF) Bit 2: Out of range (software limit switches, tuning) Bit 3: Quick Stop via fieldbus Bit 4: Error in active operating mode Bit 5: Commissioning interface (RS485) Bit 6: Integrated fieldbus Bit 7: Reserved Bit 8: Following error Bit 9: Reserved Bit 10: Inputs STO are 0 Bit 11: Inputs STO different Bit 12: Reserved Bit 13: DC bus voltage low Bit 14: DC bus voltage high Bit 15: Mains phase missing Bit 16: Integrated encoder interface Bit 17: Overtemperature motor Bit 18: Overtemperature power stage Bit 19: Reserved Bit 20: Memory card Bit 21: Optional fieldbus module Bit 22: Optional encoder module Bit 23: Optional safety module eSM or module IOM1 Bit 24: Reserved Bit 25: Reserved Bit 26: Motor connection Bit 27: Motor overcurrent/short circuit Bit 28: Frequency of reference signal too high Bit 29: EEPROM error Bit 30: System start-up (hardware or parameter) Bit 31: System error (for example, watchdog, internal hardware interface) Monitoring functions are product-dependent.	- - - -	UINT32 UINT32 R/- - -	CANopen 301C:8$_h$ Modbus 7184

0198441113956, V1.00, 07.2013

10.3.1 EtherCAT state machine

According the IEC 61800-7-304, the following EtherCAT states have been defined for an EtherCAT network:

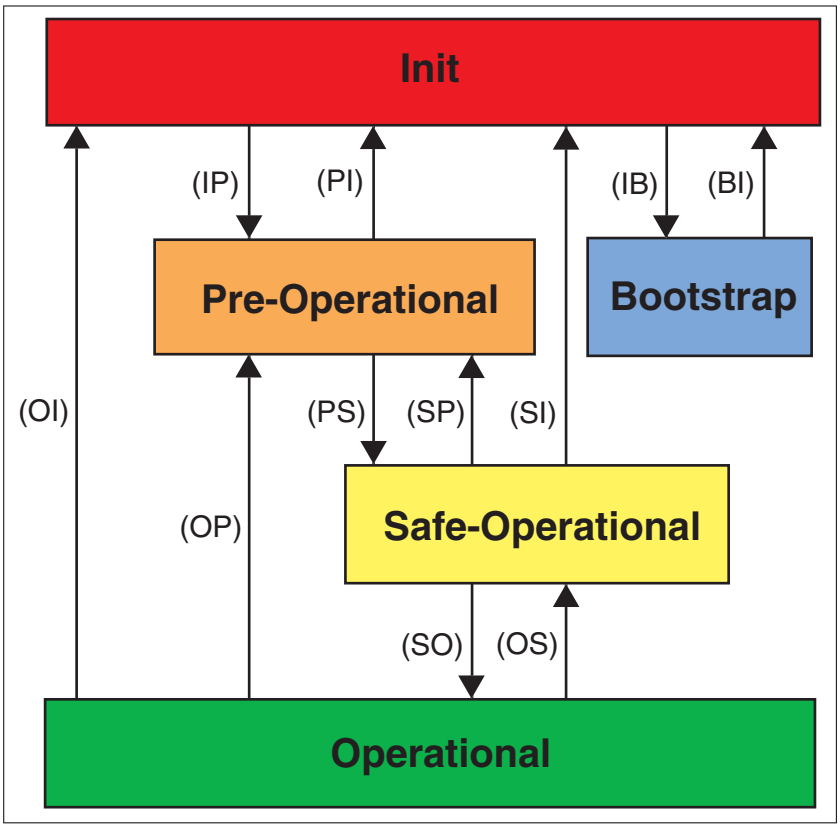

Figure 113: EtherCAT state machine

States

The state **Init** defines the foundation of the communication relationship between the master and the slaves at the application layer. Direct communication between the master and the slave is impossible at the application layer. The master uses the Init state to initialize a set of configuration registers of the EtherCAT slave controllers. If the slaves support mailbox services, the Sync Manager is also configured in this state.

In the **Pre-Operational** state, the mailbox is active. Both master and slave use the mailbox and the corresponding protocol to interchange application-specific initialization data and parameters. In this state, process data communication is not possible.

If the drive does not receive a valid mapping for the process data from the EtherCAT master, it remains in this state.

In the **Safe-Operational** state, the slave application provides current input data such as limit switche data. Output data of the master are ignored in this state. This state is not a safety function.

In the state **Operational**, the slave applications deliver current input data and the drive processes the current output data from the master, such as target positions.

State transitions

The following state transitions are defined:

0198441113956, V1.00, 07.2013

State transition	Local management service
IP	Start Mailbox Communication
PI	Stop Mailbox Communication
PS	Start Input Update
SP	Stop Input Update
SO	Start Output Update
OS	Stop Output Update
OP	Stop Output Update and Stop Input Update
SI	Stop Input Update, Stop Mailbox Communication
OI	Stop Input Update, Stop Input Update, Stop Mailbox Communication
IB	Start Bootstrap Mode
BI	Restart Device

0198441113956, V1.00, 07.2013

10.4 Warnings and errors

Meaning of a warning message

A warning alerts to a problem that was detected by a monitoring function. The cause of a warning must be remedied.
A warning belongs to error class 0 and does not cause a transition of the operating state.

Meaning of an error message

An error is a deviation from the required value or state. Errors are subdivided into different error classes.

Error class

The product triggers an error response if an error occurs. Depending upon the severity of the error, the device responds in accordance with one of the following error classes:

Error class	Response	Meaning
0	Warning	A monitoring function has detected a problem. No interruption of the movement.
1	"Quick Stop"	Motor stops with "Quick Stop", the power stage remains enabled.
2	"Quick Stop" with switch-off	Motor stops with "Quick Stop", the power stage is disabled after standstill has been achieved.
3	Fatal error	The power stage is immediately disabled without stopping the motor first.
4	Uncontrolled operation	The power stage is immediately disabled without stopping the motor first. The error can only be reset by switching off the product.

0198441113956, V1.00, 07.2013

10.4.1 Indicating warnings and errors via the commissioning software

See the information provided with the commissioning software for details on how to display warnings and detected errors using the commissioning software.

10.4.2 Indicating warnings and errors via the signal outputs

Indicating warnings and errors

Selected warnings or errors can be output via the signal outputs.

In order to output a warning or an error via a signal outputs, you must first parameterizes the signal output functions "Selected Warning" or "Selected Error", see chapter
"8.5.2 Setting the digital signal inputs and signal outputs".

The parameters `MON_IO_SelWar1`, `MON_IO_SelWar2`, `MON_IO_SelErr1` and `MON_IO_SelErr2` are used to specify the error or warning numbers; if these errors or warnings occur, a signal output is to be set.

Parameter name	Description	Unit Minimum value Factory setting Maximum value	Data type R/W Persistent Expert	Parameter address via fieldbus
`MON_IO_SelWar1`	First number for the signal output function Selected Warning Changed settings become active immediately.	- 0 0 65535	UINT16 UINT16 R/W per. -	CANopen 303B:8h Modbus 15120
`MON_IO_SelWar2`	Second number for the signal output function Selected Warning Changed settings become active immediately.	- 0 0 65535	UINT16 UINT16 R/W per. -	CANopen 303B:9h Modbus 15122
`MON_IO_SelErr1`	First number for the signal output function Selected Error Changed settings become active immediately.	- 0 0 65535	UINT16 UINT16 R/W per. -	CANopen 303B:6h Modbus 15116
`MON_IO_SelErr2`	Second number for the signal output function Selected Error Changed settings become active immediately.	- 0 0 65535	UINT16 UINT16 R/W per. -	CANopen 303B:7h Modbus 15118

0198441113956, V1.00, 07.2013

10.4.3 Indicating warnings and errors via the fieldbus

10.4.3.1 Last warning and last error

If the master controller receives information concerning a warning or an error via the process data communication, the following parameters can be used to read the error number.

Last warning The parameter `_LastWarning` allows you to read the error number of the last warning. As long as no warning threshold has been exceeded, the value of this parameter is 0.

Parameter name	Description	Unit Minimum value Factory setting Maximum value	Data type R/W Persistent Expert	Parameter address via fieldbus
`_LastWarning`	Number of last warning (error class 0) Number of the most recent warning. If the warning becomes inactive again, the number is memorized until the next fault reset. Value 0: No warning occurred	- - - -	UINT16 UINT16 R/- - -	CANopen 301C:9_h Modbus 7186

Last Error The parameter `_LastError` allows you to read the error number of the last error. If there is no error, the value of the parameter is 0. If an error is detected, the error is written to the error memory along with other status information.

Parameter name	Description	Unit Minimum value Factory setting Maximum value	Data type R/W Persistent Expert	Parameter address via fieldbus
`_LastError`	Error causing a stop (error classes 1 to 4) Number of the current error. Any consequtive errors do not overwrite this error number. Example: If a limit switch error reaction caused an overvoltage error, this parameter would contain the number of the limit switch error. Exception: Errors of error class 4 overwrite existing entries.	- - - -	UINT16 UINT16 R/- - -	CANopen 603F:0_h Modbus 7178

0198441113956, V1.00, 07.2013

10.4.3.2 Error memory

General

The error memory is an error history of the last 10 errors; it is not cleared even if the product is switched off. The error memory allows you to read and evaluate past events.

The following information on the events is stored:

- Error class
- Error number
- Motor current
- Number of switch-on cycles
- Additional error information (for example, parameters)
- Product temperature
- Power stage temperature
- Time the error was detected (with reference to operating hours counter)
- DC bus voltage
- Velocity
- Number of Enable cycles after switch-on
- Time from Enable until detection of the error

The stored information relates to the situation at the point in time the error was detected.

0198441113956, V1.00, 07.2013

Error memory

The error memory can only be read sequentially. The parameter `ERR_reset` must be used to reset the read pointer. Then the first error entry can be read. The read pointer is automatically set to the next entry. A new read access delivers the next error entry. If the error number 0 is returned, there is no additional error entry.

Position of the entry	Meaning
1	First error entry (oldest message).
2	Second error entry (later message).
...	...
10	Tenth error entry. In the case of ten error entries, the most recent message is contained here.

An error entry consists of several pieces of information which can be read using different parameters. When you read an error entry, the error number must be read first with the parameter `_ERR_number`.

The following parameters allow you to manage the error memory:

0198441113956, V1.00, 07.2013

Parameter name	Description	Unit Minimum value Factory setting Maximum value	Data type R/W Persistent Expert	Parameter address via fieldbus
ERR_clear	Clear error memory Value 1: Delete entries in the error memory The clearing process is completed if a 0 is returned after a read access. Changed settings become active immediately.	- 0 - 1	UINT16 UINT16 R/W - -	CANopen 303B:4h Modbus 15112
ERR_reset	Reset error memory read pointer Value 1: Set error memory read pointer to oldest error entry. Changed settings become active immediately.	- 0 - 1	UINT16 UINT16 R/W - -	CANopen 303B:5h Modbus 15114
_ERR_class	Error class Value 0: Warning (no response) Value 1: Error class 1 Value 2: Error class 2 Value 3: Error class 3 Value 4: Error class 4	- 0 - 4	UINT16 UINT16 R/- - -	CANopen 303C:2h Modbus 15364
_ERR_number	Error number Reading this parameter copies the entire error entry (error class, time of occurrence of error, ...) to an intermediate memory from which the elements of the error can then be read. In addition, the read pointer of the error memory is automatically set to the next error entry.	- 0 - 65535	UINT16 UINT16 R/- - -	CANopen 303C:1h Modbus 15362
_ERR_motor_I	Motor current at error time In increments of 0.01 A_{rms}.	A_{rms} - - -	UINT16 UINT16 R/- - -	CANopen 303C:9h Modbus 15378
_ERR_powerOn	Number of power on cycles	- 0 - 4294967295	UINT32 UINT32 R/- - -	CANopen 303B:2h Modbus 15108
_ERR_qual	Error additional information This entry contains additional information on the error, depending on the error number. Example: a parameter address	- 0 - 65535	UINT16 UINT16 R/- - -	CANopen 303C:4h Modbus 15368
_ERR_temp_dev	Temperature of device at error time	°C - - -	INT16 INT16 R/- - -	CANopen 303C:Bh Modbus 15382
_ERR_temp_ps	Temperature of power stage at error time	°C - - -	INT16 INT16 R/- - -	CANopen 303C:Ah Modbus 15380

0198441113956, V1.00, 07.2013

Parameter name	Description	Unit Minimum value Factory setting Maximum value	Data type R/W Persistent Expert	Parameter address via fieldbus
_ERR_time	Error time With reference to operating hours counter	s 0 - 536870911	UINT32 UINT32 R/- - -	CANopen 303C:3h Modbus 15366
_ERR_DCbus	DC bus voltage at error time In increments of 0.1 V.	V - - -	UINT16 UINT16 R/- - -	CANopen 303C:7h Modbus 15374
_ERR_motor_v	Motor velocity at error time	usr_v - - -	INT32 INT32 R/- - -	CANopen 303C:8h Modbus 15376
_ERR_enable_cycl	Number of cycles of enabling the power stage at error time Number of cycles of enabling the power stage from the time the power supply (control voltage) was switched on to the time the error occurred.	- - - -	UINT16 UINT16 R/- - -	CANopen 303C:5h Modbus 15370
_ERR_enable_time	Time between enabling of power stage and occurrence of the error	s - - -	UINT16 UINT16 R/- - -	CANopen 303C:6h Modbus 15372

0198441113956, V1.00, 07.2013

10.5 Table of warnings and errors by range

The table below summarizes the error numbers classified by range.

Error number	Range
E 1xxx	General
E 2xxx	Overcurrent
E 3xxx	Voltage
E 4xxx	Temperature
E 5xxx	Hardware
E 6xxx	Software
E 7xxx	Interface, wiring
E 8xxx	Fieldbus
E Axxx	Motor movement
E Bxxx	Communication

Error number not listed

If the error number is not listed in the table below, the firmware version may be newer than the version of the manual or there may be a system error.

- Verify that you use the correct manual (" About the book")
- Verify that the wiring is EMC-compliant ("5.1 Electromagnetic compatibility, EMC")
- Contact technical support ("13.1 Service address")

List of error numbers

The table below provides an overview of the error numbers.

0198441113956, V1.00, 07.2013

Error number	Error class	Description	Cause	Correctives
E 1100	-	Parameter out of permissible value range	The value entered was outside of the permissible value range for this parameter.	The entered value must be within the permissible value range.
E 1101	-	Parameter does not exist	Error signaled by parameter management: Parameter (index) does not exist.	Select a different parameter (index).
E 1102	-	Parameter does not exist	Error signaled by parameter management: Parameter (subindex) does not exist.	Select a different parameter (subindex).
E 1103	-	Parameter write not permissible (READ only)	Write access to read only parameter.	Write only to parameters that are not read-only.
E 1104	-	Write access denied (no access authorization)	Parameter only accessible at expert level.	The write access level expert is required.
E 1105	-	Block Upload/Download not initialized		
E 1106	-	Command not permissible while power stage is active	Command not permissible while the power stage is enabled (operating state Operation Enabled or Quick Stop Active).	Disable the power stage and repeat the command.
E 1107	-	Access via other interface blocked	Access occupied by another channel (for example: Commissioning software is active and fieldbus access was tried at the same time).	Check the channel that blocks the access.
E 1108	-	File cannot be uploaded: Unknown file ID		
E 1109	1	Data stored after a power outage is invalid		
E 110A	-	System error: No bootloader available		
E 110B	3	Configuration error (additional info=Modbus register address) Parameter `_SigLatched` Bit 30	Error detected during parameter check (for example, reference velocity value for operating mode Profile Position is greater than maximum permissible velocity of drive).	Value in additional error information shows the Modbus register address of the parameter where the initialization error was detected.
E 110D	1	Basic configuration of drive required after factory setting	The "First Setup" (FSU) was not run at all or not completed.	Perform a First Setup.
E 110E	-	Parameter changed that requires a restart of the drive	Only displayed by the commissioning software. A parameter modification requires the drive to be switched off and on.	Restart the drive to activate the parameter functionality. See the chapter Parameters for the parameter that requires a restart of the drive.
E 110F	-	Function not available in this type of device	The specific type of device does not support this function or this parameter value.	Check if you have the correct device type, in particular type of motor, type of encoder, holding brake.
E 1110	-	Unknown file ID for upload or download	The specific type of device does not support this kind of file.	Verify that you have the correct device type or the correct configuration file.
E 1111	-	File transfer not correctly initialized	A previous file transfer has been aborted.	

0198441113956, V1.00, 07.2013

Error number	Error class	Description	Cause	Correctives
E 1112	-	Locking of configuration denied	An external tool has tried to lock the configuration of the drive for upload or download. This may not work because another tool had already locked the configuration of the drive or the drive is in an operating state that does not allow locking.	
E 1113	-	System not locked for configuration transfer	An external tool has tried to transfer the configuration without locking the drive.	
E 1114	4	Configuration download aborted Parameter `_SigLatched` Bit 5	During a configuration download, a communication error or an error in the external tool occurred. The configuration was only partially transferred to the drive and might be inconsistent now.	Switch the drive off/on and retry to download the configuration or restore the factory settings.
E 1115	0	Incorrect configuration file format Parameter `_WarnLatched` Bit 5	An external tool has downloaded a configuration which has an invalid or unknown format.	
E 1116	-	Request is processed asynchronously		
E 1117	-	Asynchronous request blocked	Request to a module is blocked because the module is currently processing another request.	
E 1118	-	Configuration data incompatible with device	The configuration data contains data from a different device.	Check device type including type of power stage.
E 1119	-	Incorrect data length, too many bytes		
E 111A	-	Incorrect data length, insufficient number of bytes		
E 111B	4	Configuration download error (additional info=Modbus register address)	During a configuration download, one or more configuration values have not been accepted by the drive.	Check whether the configuration file is valid and matches the type and version of the drive. The value in the additional error info shows the Modbus register address of the parameter where the initialization error was detected.
E 111C	1	Not possible to initialize recalculation for scaling	A parameter could not be initialized.	The address of the parameter that caused the error can be read via the parameter _PAR_ScalingError.
E 111D	3	Original state of a parameter after error during recalculation of parameters with user-defined units cannot be restored.	The drive contained an invalid configuration before the recalculation was started. An error occurred during the recalculation.	Switch the drive off and on again. This may help you to identify the affected parameter(s). Change the parameters as required. Verify that the parameter configuration is valid before starting the recalculation procedure.

0198441113956, V1.00, 07.2013

Error number	Error class	Description	Cause	Correctives
E 111F	1	Recalculation not possible.	Invalid scaling factor.	Check whether you really want the selected scaling factor. Try a different scaling factor. Before triggering scaling, reset the parameters with user-defined units.
E 1120	1	Recalculation for scaling not possible	A parameter could not be recalculated.	The address of the parameter that caused the error can be read via the parameter _PAR_ScalingError.
E 1121	-	Incorrect sequence of steps for scaling (fieldbus)	The recalculation has been started prior to the initialization.	The recalculation must be started after the initialization.
E 1122	-	Recalculation for scaling not possible	Recalculation for scaling is already running.	Wait for the running recalculation for scaling to finish.
E 1123	-	Parameter cannot be changed	Recalculation for scaling is running.	Wait for the running recalculation for scaling to finish.
E 1124	1	Timeout during recalculation for scaling	The time between the initialization of the recalculation and the start of the recalculation has been exceeded (30 seconds).	Recalculation must be started within 30 seconds after initialization.
E 1125	1	Scaling not possible	The scaling factors for position, velocity or acceleration/ deceleration are beyond internal calculation limits.	Retry with different scaling factors.
E 1126	-	Configuration is blocked by another access channel		Close other access channel (for example, other instance of commissioning software).
E 1127	-	Invalid key received		
E 1128	-	Special login is required for Manufacturing Test Firmware		
E 1129	-	Test step not yet started		
E 112D	-	Current configuration of edges is not supported	The selected capture input does not support rising and falling edge at the same time.	Set the edge to either "rising" or "falling".
E 1300	3	Safety function STO activated (STO_A, STO_B) Parameter `_SigLatched` Bit 10	The safety function STO was activated in the operating state Operation Enabled.	Check the wiring of the inputs of the safety function STO and reset the error.
E 1301	4	STO_A and STO_B different level Parameter `_SigLatched` Bit 11	The levels of the inputs STO_A and STO_B were different for more than 1 second.	The drive has to be switched off and the reason fixed (for example, check whether EMERGENCY STOP is active) before it is switched on.
E 1302	0	Safety function STO activated (STO_A, STO_B) Parameter `_WarnLatched` Bit 10	Safety function STO was activated while the power stage was disabled.	The warning is automatically reset once the safety function STO is deactivated.
E 1311	-	The selected signal input function or signal output function cannot be configured	The selected signal input function or signal output function cannot be used in the selected operating mode.	Select another function or change the operating mode.

0198441113956, V1.00, 07.2013

Error number	Error class	Description	Cause	Correctives
E 1312	-	Limit switch or reference switch signal not defined for signal input function	Reference movements require limit switches. These limit switches are not assigned to inputs.	Assign the signal input functions Positive Limit Switch, Negative Limit Switch and Reference Switch.
E 1313	-	Configured debounce time not possible for this signal input function	The signal input function does not support the selected debounce time.	Set the debounce time to a valid value.
E 1314	4	At least two inputs have the same signal input function.	At least two inputs are configured with the same signal input function.	Reconfigure the inputs.
E 1316	1	Position capture via signal input currently not possible Parameter `_SigLatched` Bit 28	Position capture is already being used.	
E 1501	4	System error: DriveCom state machine unknown state		
E 1502	4	System error: HWL low-level state machine unknown state		
E 1503	1	Quick Stop triggered via fieldbus	A Quick Stop has been triggered via the fieldbus. The Quick Stop option code has been set to -1 or -2 which causes the drive to transition to the operating state 9 Fault instead of the operating state 7 Quick Stop Active.	
E 1600	-	Oscilloscope: No additional data available		
E 1601	-	Oscilloscope: Parameterization incomplete		
E 1602	-	Oscilloscope: Trigger variable not defined		
E 1606	-	Logging still active		
E 1607	-	Logging: No trigger defined		
E 1608	-	Logging: Invalid trigger option		
E 1609	-	Logging: No channel selected		
E 160A	-	Logging: No data available		
E 160B	-	Parameter cannot be logged		
E 160C	1	Autotuning: Moment of inertia outside permissible range	The load inertia is too high.	Verify that the system can easily be moved. Check the load. Use a differently rated drive.
E 160E	1	Autotuning: Test movement could not be started		
E 160F	1	Autotuning: Power stage cannot be enabled	Autotuning was not started in the operating state Ready To Switch On.	Start Autotuning when the drive is in the operating state Ready To Switch On.
E 1610	1	Autotuning: Processing stopped	Autotuning process stopped by user command or by drive error (see additional error message in error memory, for example, DC bus undervoltage, limit switches triggered)	Fix the cause of the stop and restart Autotuning.

0198441113956, V1.00, 07.2013

Error number	Error class	Description	Cause	Correctives
E 1611	1	System error: Autotuning internal write access	HALT is active and an Autotuning parameter is written. Occurs when Autotuning is started.	
E 1612	1	System error: Autotuning internal read access		
E 1613	1	Autotuning: Maximum permissible movement range exceeded Parameter `_SigLatched` Bit 2	The motor exceeded the adjusted movement range during Autotuning.	Increase the movement range value or disable range monitoring by setting AT_DIS = 0.
E 1614	-	Autotuning: Already active	Autotuning has been started twice simultaneously or an Autotuning parameter is modified during Autotuning (parameter AT_dis and AT_dir).	Wait for Autotuning to finish before restarting Autotuning.
E 1615	-	Autotuning: This parameter cannot be changed while Autotuning is active	Parameter AT_gain or AT_J are written during Autotuning.	Wait for Autotuning to finish before changing the parameter.
E 1617	1	Autotuning: Friction torque or load torque too great	The current limit has been reached (parameter CTRL_I_max).	Verify that the system can easily be moved. Check the load. Use a differently rated drive.
E 1618	1	Autotuning: Optimization aborted	The internal Autotuning sequence has not been finished (following error?).	Note the additional information provided in the error memory.
E 1619	-	Autotuning: The velocity jump height in parameter AT_n_ref is too small	Parameter AT_n_ref < 2 * AT_n_tolerance. Checked only once at the first velocity jump.	Modify the parameter AT_n_ref or AT_n_tolerance to meet the desired condition.
E 1620	1	Autotuning: Load torque too high	Product rating is not suitable for the machine load. Detected machine inertia is too high compared to the inertia of the motor.	Reduce load, check rating.
E 1621	1	System error: Calculation error		
E 1622	-	Autotuning: Not possible to perform Autotuning	Autotuning can only be performed if no operating mode is active.	Terminate the active operating mode or disable the power stage.
E 1623	1	Autotuning: HALT request has stopped the autotuning process	Autotuning can only be performed if no operating mode is active.	Terminate the active operating mode or disable the power stage.
E 1A00	-	System error: FIFO memory overflow		
E 1A01	3	Motor has been changed (different type of motor) Parameter `_SigLatched` Bit 16	Detected motor type is different from previously detected motor.	Confirm the change.
E 1A03	4	System error: Hardware and firmware do not match		
E 1B00	3	System error: Incorrect parameters for motor and power stage Parameter `_SigLatched` Bit 30	Incorrect manufacturer parameter value (data) non-volatile memory of device.	Replace device.
E 1B02	3	Target value too high. Parameter `_SigLatched` Bit 30		

0198441113956, V1.00, 07.2013

Error number	Error class	Description	Cause	Correctives
E 1B05	2	Error during parameter switching Parameter `_SigLatched` Bit 30		
E 1B0C	3	Actual motor velocity too high.		
E 1B0D	3	Velocity value determined by velocity observer is incorrect	Incorrect system inertia for velocity observer calculations. Incorrect velocity observer dynamics. System inertia changes during operation. In this case, operation with velocity observer is not possible and the velocity observer has to be switched off.	Change the velocity observer dynamics via the parameter CTRL_SpdObsDyn. Change the system inertia used for velocity observer calculations via the parameter CTRL_SpdObsInert. If error persists, deactivate velocity observer.
E 2201	2	System error: DC bus relay error Parameter `_SigLatched` Bit 30	Inoperative DC bus relay.	Contact Technical Support.
E 2300	3	Power stage overcurrent Parameter `_SigLatched` Bit 27	Motor short circuit and disabling of the power stage. Motor phases are inverted.	Check the motor power connection.
E 2301	3	Braking resistor overcurrent Parameter `_SigLatched` Bit 27	Braking resistor short circuit.	If you use the internal braking resistor, please contact Technical Support. If you use an external braking resistor, check the wiring and the rating of the braking resistor.
E 3100	par.	Missing mains supply, undervoltage mains supply or overvoltage mains supply Parameter `_SigLatched` Bit 15	Missing phase(s) for more than 50 ms. Mains voltage is out of range. Mains frequency is out of range.	Verify that the values of the mains power supply network comply with the technical data.
E 3200	3	DC bus overvoltage Parameter `_SigLatched` Bit 14	Excessive regeneration during braking.	Check deceleration ramp, check rating of drive and braking resistor.
E 3201	3	DC bus undervoltage (shutdown threshold) Parameter `_SigLatched` Bit 13	Power supply loss, poor power supply.	Check mains supply.
E 3202	2	DC bus undervoltage (Quick Stop threshold) Parameter `_SigLatched` Bit 13	Power supply loss, poor power supply.	Check mains supply.
E 3206	0	Undervoltage DC bus, missing mains supply, undervoltage mains supply or overvoltage mains supply Parameter `_WarnLatched` Bit 13	Missing phase(s) for more than 50 ms. Mains voltage is out of range. Mains frequency is out of range. Mains voltage and parameter setting of MON_MainsVolt do not match (for example, mains voltage is 230 V and MON_MainsVolt is set to 115 V).	Verify that the values of the mains power supply network comply with the technical data. Check the settings of the parameter for reduced mains voltage.
E 3300	0	Maximum motor voltage is too low for the power stage used	The maximum motor voltage M_U_max is too low. The power stage supply voltage and the maximum motor voltage do not match.	Use a motor with a higher maximum voltage M_U_max. If this warning is ignored, the motor may be damaged.

0198441113956, V1.00, 07.2013

Error number	Error class	Description	Cause	Correctives
E 4100	3	Power stage overtemperature Parameter `_SigLatched` Bit 18	Transistors overtemperature: Ambient temperature is too high, fan is inoperative, dust.	Check the fan, improve the heat dissipation in the cabinet.
E 4101	0	Warning power stage overtemperature Parameter `_WarnLatched` Bit 18	Transistors overtemperature: Ambient temperature is too high, fan is inoperative, dust.	Check the fan, improve the heat dissipation in the cabinet.
E 4102	0	Power stage overload (I2t) Parameter `_WarnLatched` Bit 30	The current has exceeded the nominal value for an extended period of time.	Check rating, reduce cycle time.
E 4200	3	Device overtemperature Parameter `_SigLatched` Bit 18	Board overtemperature: Ambient temperature is too high.	Check fan, improve the heat dissipation in the cabinet.
E 4201	0	CPU temperature warning threshold exceeded	Overtemperature caused by, for example, excessively high ambient temperature or heat dissipation impaired by dust.	Improve heat dissipation, for example, by installing a cooling fan or improving the heat transfer at the flange.
E 4300	2	Motor overtemperature Parameter `_SigLatched` Bit 17	Ambient temperature is too high. Duty cycle is too high. Motor not properly mounted (thermal isolation). Motor overload (power losses too high).	Check motor installation: The heat must be dissipated via the mounting surface. Reduce ambient temperature. Provide ventilation.
E 4301	0	Warning motor overtemperature Parameter `_WarnLatched` Bit 17	Resistance of thermal sensor is too high; overload, ambient temp (see I2t).	Check motor installation: The heat must be dissipated via the mounting surface.
E 4302	0	Motor overload (I2t) Parameter `_WarnLatched` Bit 31	The current has exceeded the nominal value for an extended period of time.	Verify that the system can easily be moved. Check the load. Use a differently sized motor, if necessary.
E 4303	0	No motor temperature monitoring	The temperature parameters (in electronic nameplate of motor, non-volatile memory of encoder) are unavailable or invalid; parameter A12 is equal to 0.	Contact Technical Support. Replace motor.
E 4304	0	The encoder type does not support motor temperature monitoring.		
E 4402	0	Warning: Braking resistor overload (I2t > 75%) Parameter `_WarnLatched` Bit 29	The braking resistor has been switched on for such a long period of time that 75% of its overload capability have been exceeded.	The regeneration energy is too high. Possible causes: The external loads are too high, the motor velocity is too high, the deceleration is too fast.
E 4403	par.	Braking resistor overload (I2t > 100%)	The braking resistor is switched on for an excessively long period of time.	The regeneration energy is too high. Possible causes: The external loads are too high, the motor velocity is too high, the deceleration is too fast.
E 5101	0	Modbus power supply missing		
E 5102	4	Motor encoder supply voltage Parameter `_SigLatched` Bit 16	Encoder power supply is not within permissible range of 8V to 12V; there may be a hardware problem.	Replace the device. Contact Technical Support.

0198441113956, V1.00, 07.2013

Error number	Error class	Description	Cause	Correctives
E 5200	4	Error at connection to motor encoder Parameter `_SigLatched` Bit 16	Incorrect encoder cable or cable not connected, EMC.	Check the cable connection and the shield.
E 5201	4	Errors in motor encoder communication Parameter `_SigLatched` Bit 16	Encoder error message: Communication error detected by the encoder itself.	Check the cable connection and the shield.
E 5202	4	Motor encoder is not supported Parameter `_SigLatched` Bit 16	Incompatible encoder type is connected.	Use genuine accessories.
E 5203	4	Connection error motor encoder Parameter `_SigLatched` Bit 16		
E 5204	3	Connection to motor encoder lost Parameter `_SigLatched` Bit 16	Encoder cable problems (communication has been interrupted).	Check the cable connection.
E 5206	0	Communication error in encoder Parameter `_WarnLatched` Bit 16	Communication disturbed, EMC.	Check cable specifications, shield connection and EMC.
E 5207	1	Function is not supported	The current hardware revision does not support the function.	
E 5302	4	The motor requires a PWM frequency (16kHz) which the power stage does not support.	The connected motor only works with a PWM frequency of 16 kHz (motor nameplate entry). However, the power stage does not support this PWM frequency.	Use a motor that works with a PWM frequency of 8 kHz.
E 5430	4	System error: EEPROM read error Parameter `_SigLatched` Bit 29		
E 5431	3	System error: EEPROM write error Parameter `_SigLatched` Bit 29		
E 5432	3	System error: EEPROM state machine Parameter `_SigLatched` Bit 29		
E 5433	3	System error: EEPROM address error Parameter `_SigLatched` Bit 29		
E 5434	3	System error: EEPROM incorrect data length Parameter `_SigLatched` Bit 29		
E 5435	4	System error: EEPROM not formatted Parameter `_SigLatched` Bit 29		
E 5436	4	System error: EEPROM incompatible structure Parameter `_SigLatched` Bit 29		
E 5437	4	System error: EEPROM checksum error (manufacturer data) Parameter `_SigLatched` Bit 29		

0198441113956, V1.00, 07.2013

Error number	Error class	Description	Cause	Correctives
E 5438	3	System error: EEPROM checksum error (user parameters) Parameter `_SigLatched` Bit 29		
E 5439	3	System error: EEPROM checksum error (fieldbus parameters) Parameter `_SigLatched` Bit 29		
E 543B	4	System error: No valid manufacturer data Parameter `_SigLatched` Bit 29		
E 543E	3	System error: EEPROM checksum error (NoInit parameter) Parameter `_SigLatched` Bit 29		
E 543F	3	System error: EEPROM checksum error (motor parameters) Parameter `_SigLatched` Bit 29		
E 5441	4	System error: EEPROM checksum error (global controller parameter set) Parameter `_SigLatched` Bit 29		
E 5442	4	System error: EEPROM checksum error (controller parameter set 1) Parameter `_SigLatched` Bit 29		
E 5443	4	System error: EEPROM checksum error (controller parameter set 2) Parameter `_SigLatched` Bit 29		
E 5444	4	System error: EEPROM checksum error (NoReset parameter) Parameter `_SigLatched` Bit 29		
E 5445	4	System error: EEPROM checksum error (hardware information) Parameter `_SigLatched` Bit 29		
E 5446	4	System error: EEPROM checksum error (for power outage data) Parameter `_SigLatched` Bit 29	Problem with internal EEPROM detected.	Restart the drive. If the error persists, contact Technical Support.
E 5447	3	System error: EEPROM checksum error (data sets operating mode Motion Sequence) Parameter `_SigLatched` Bit 29		
E 5448	2	System error: Communication error to memory card Parameter `_SigLatched` Bit 20		
E 5449	2	System error: Memory card bus is busy Parameter `_SigLatched` Bit 20		

0198441113956, V1.00, 07.2013

Error number	Error class	Description	Cause	Correctives
E 544A	4	System error: EEPROM checksum error (administration data) Parameter `_SigLatched` Bit 29		
E 544B	4	System error: EEPROM checksum error (DeviceNet data) Parameter `_SigLatched` Bit 29		
E 544C	4	System error: EEPROM is write-protected Parameter `_SigLatched` Bit 29		
E 544D	2	System error: Memory card error Parameter `_SigLatched` Bit 20	An error may have occurred during the last saving procedure or the memory card may be inoperative.	Retry saving the data. Replace the memory card.
E 544E	2	System error: Memory card error Parameter `_SigLatched` Bit 20	An error may have occurred during the last saving procedure or the memory card may be inoperative.	Retry saving the data. Replace the memory card.
E 544F	2	System error: Memory card error Parameter `_SigLatched` Bit 20	An error may have occurred during the last saving procedure or the memory card may be inoperative.	Retry saving the data. Replace the memory card.
E 5451	0	System error: No memory card available Parameter `_WarnLatched` Bit 20		
E 5452	2	System error: Data on memory card and device do not match Parameter `_SigLatched` Bit 20	Different type of device. Different type of power stage. Data on memory card does not match firmware version of device.	
E 5453	2	System error: Incompatible data on the memory card Parameter `_SigLatched` Bit 20		
E 5454	2	System error: Capacity of detected memory card to small Parameter `_SigLatched` Bit 20		
E 5455	2	System error: Memory card not formatted Parameter `_SigLatched` Bit 20		Update memory card via HMI command "dtoc" (drive-to-card).
E 5456	1	System error: Memory card is write-protected Parameter `_SigLatched` Bit 20	The memory card has been write-protected.	Remove memory card or disable write protection via HMI.
E 5457	2	System error: Incompatible memory card Parameter `_SigLatched` Bit 20	Memory card capacity is insufficient.	Replace memory card
E 5458	4	System error: Error during a single flash program sequence		
E 5459	1	System error: Parameter only available during flashing (flash request)		
E 545A	4	System error: Firmware update FiFo overrun		

0198441113956, V1.00, 07.2013

Error number	Error class	Description	Cause	Correctives
E 545B	4	System error: Incompatible firmware file header information		
E 545C	4	System error: Firmware file and device not compatible		
E 545D	4	System error: Firmware file checksum incorrect		
E 545E	4	System error: Firmware file header information has an odd number of bytes		
E 545F	4	System error: Size of firmware file exceeds memory capacity		
E 5460	4	System error: Loader for firmware file not available	Incorrect loader.	Contact Technical Support.
E 5461	4	System error: Firmware version in device and firmware version to be updated are identical		
E 5462	0	Memory card implicitly written by the device Parameter `_WarnLatched` Bit 20	The content of the memory card and the content of the EEPROM are not equal.	
E 5463	1	Firmware file is corrupt	Transfer of firmware file incomplete.	
E 5464	1	Firmware update in progress	Update of firmware file is still running.	
E 5465	4	System error: File header too large		
E 5466	4	System error: Bootloader does not match the bootloader required for the firmware file		
E 5467	4	System error: Loader does not match the loader required for the firmware file		
E 5600	3	Motor connection phase error Parameter `_SigLatched` Bit 26	Missing motor phase.	Check connection of motor phases.
E 5603	3	Commutation error Parameter `_SigLatched` Bit 26	Wiring error of motor cable. Encoder signals are lost or subject to interference. The load torque is greater than the motor torque. The encoder EEPROM contains incorrect data (encoder phase offset is incorrect). Motor is not adjusted.	Check motor phases, check encoder wiring. Check and improve EMC situation, check grounding and shield connection. Resize the motor so it can withstand the load torque. Check the motor data. Contact Technical Support.
E 6102	4	System error: Internal software error Parameter `_SigLatched` Bit 30		
E 6103	4	System error: System stack overflow Parameter `_SigLatched` Bit 31		
E 6104	-	System error: Division by zero (internal)		
E 6105	-	System error: Overflow during 32 bit calculation (internal)		

0198441113956, V1.00, 07.2013

Error number	Error class	Description	Cause	Correctives
E 6106	4	System error: Size of data interface does not match Parameter `_SigLatched` Bit 30		
E 6107	-	Parameter outside of value range (calculation error)		
E 6108	-	Function not available		
E 6109	-	System error: Internal range exceeded		
E 610A	2	System error: Calculated value cannot be represented as 32 bit value		
E 610D	-	Error in selection parameter	Wrong parameter value selected.	Check the value to be written.
E 610E	4	System error: 24 VDC below undervoltage threshold for shutdown		
E 610F	4	System error: Internal timer basis error (Timer0) Parameter `_SigLatched` Bit 30		
E 6111	2	System error: Memory area locked Parameter `_SigLatched` Bit 30		
E 6112	2	System error: Out of memory Parameter `_SigLatched` Bit 30		
E 6113	1	System error: Calculated value cannot be represented as a 16 bit value		
E 6114	4	System error: Impermissible function call from interrupt service routine	Programming error	
E 6115	4	System error: IGBT thermal connection test has been started	Manufacturing Test Firmware	
E 7100	4	System error: Invalid power stage data Parameter `_SigLatched` Bit 30	Power stage data stored in device is corrupt (wrong CRC), error in internal memory data.	Contact Technical Support or replace the device.
E 7111	-	Parameter cannot be changed because the external braking resistor is active.	An attempt is made to change one of the parameters RESext_ton, RESext_P or RESext_R even though the external braking resistor is active.	Verify that the external braking resistor is not active if one of the parameters RESext_ton, RESext_P or RESext_R has to be changed.
E 7112	2	No external braking resistor connected	External braking resistor activated (Parameter RESint_ext), but no external resistor is detected.	Check wiring of the external braking resistor. Verify correct resistance.
E 7113	-	Control voltage for holding brake too low	The DC bus voltage is too low (temporarily or permanently). The ripple is too high.	Increase the supply voltage. Stabilize the mains supply.
E 7114	2	No braking resistor connected	Connection to braking resistor lost	Check wiring of the braking resistor. Verify correct resistance.

0198441113956, V1.00, 07.2013

Error number	Error class	Description	Cause	Correctives
E 7120	4	Invalid motor data Parameter `_SigLatched` Bit 16	Motor data is corrupt (wrong CRC).	Contact Technical Support or replace the motor.
E 7121	2	System error: Errors in motor encoder communication Parameter `_SigLatched` Bit 16	EMC, detailed information is included in the error memory that contains the error code of the encoder.	Contact Technical Support.
E 7122	4	Invalid motor data Parameter `_SigLatched` Bit 30	Motor data stored in motor encoder is corrupt, error in internal memory data.	Contact Technical Support or replace the motor.
E 7124	4	System error: Motor encoder inoperative Parameter `_SigLatched` Bit 16	Encoder signals internal error.	Contact Technical Support or replace the motor.
E 7125	4	System error: Length specification for user data too great Parameter `_SigLatched` Bit 16		
E 7129	0	System error: Error in motor encoder Parameter `_WarnLatched` Bit 16		
E 712C	0	System error: Communication with encoder not possible Parameter `_WarnLatched` Bit 16		
E 712D	4	Electronic motor nameplate not found Parameter `_SigLatched` Bit 16	Motor data is corrupt (wrong CRC). Motor without electronic motor nameplate (for example, SER motor)	Contact Technical Support or replace the motor.
E 712F	0	No data segment of the electronic motor nameplate		
E 7132	0	System error: Motor configuration cannot be written		
E 7134	4	Incomplete motor configuration Parameter `_SigLatched` Bit 16		
E 7135	4	Format is not supported Parameter `_SigLatched` Bit 16		
E 7136	4	Incorrect encoder type selected with parameter MotEnctype Parameter `_SigLatched` Bit 16		
E 7137	4	Error during the internal conversion of the motor configuration Parameter `_SigLatched` Bit 16		
E 7138	4	Parameter of the motor configuration out of permissible range Parameter `_SigLatched` Bit 16		
E 7139	0	Encoder offset: Data segment in encoder is corrupt.		
E 713A	3	Adjustment value of the encoder of the third party motor has not yet been determined. Parameter `_SigLatched` Bit 16		

0198441113956, V1.00, 07.2013

Error number	Error class	Description	Cause	Correctives
E 7200	4	System error: Calibration analog/ digital converter during manufacturing / incorrect BLE file Parameter `_SigLatched` Bit 30		
E 7320	4	System error: Invalid encoder parameter Parameter `_SigLatched` Bit 16	Communication channel (Hiperface) to encoder is subject to interference, motor encoder has not been factory-parameterized.	Contact Technical Support.
E 7321	3	Timeout reading the absolute position from the encoder Parameter `_SigLatched` Bit 16	Communication channel (Hiperface) to encoder is subject to interference or motor encoder is inoperative.	Check wiring and shield connection of encoder cable or replace motor.
E 7327	0	Error bit set in Hiperface answer Parameter `_WarnLatched` Bit 16	EMC problems.	Check wiring (shield).
E 7328	4	Motor encoder: Position evaluation error Parameter `_SigLatched` Bit 16	Position evaluation problem detected by encoder.	Contact Technical Support or replace the motor.
E 7329	0	Motor encoder: Warning Parameter `_WarnLatched` Bit 16	EMC, encoder signals internal warning.	Contact Technical Support or replace the motor.
E 7330	4	System error: Motor encoder (Hiperface) Parameter `_SigLatched` Bit 16		Check wiring and shield connection of encoder cable. Contact Technical Support.
E 7331	4	System error: Motor encoder initialization Parameter `_SigLatched` Bit 30		Check wiring and shield connection of encoder cable. Contact Technical Support.
E 7335	0	Communication with motor encoder active Parameter `_WarnLatched` Bit 16	Command is being processed or communication may be disturbed by EMC problems.	Check shield connection of encoder cable. Contact Technical Support.
E 733F	3	Amplitude of encoder analog signals too low Parameter `_SigLatched` Bit 16	Incorrect encoder wiring. Encoder not connected. Encoder signals subject to EMC interference (shield connection, cabling, etc.).	
E 7340	3	Reading of absolute position aborted, number of unsuccessful consecutive attempts too great Parameter `_SigLatched` Bit 16	Communication channel (Hiperface) to encoder is subject to interference. Encoder (in motor) is inoperative.	Check wiring and shield connection of encoder cable, replace motor.
E 7341	0	Encoder temperature warning level reached Parameter `_WarnLatched` Bit 16	The maximum permissible duty cycle is exceeded. The motor was not mounted properly, for example, it is thermally isolated. The motor is blocked or damaged so that more current is used than under normal conditions. The ambient temperature is too high.	Reduce the duty cycle, for example, reduce acceleration. Supply additional cooling, for example, use a fan. Mount the motor in such a way as to increase thermal conductivity. Use a differently rated drive or motor. Replace the motor if it is damaged.

0198441113956, V1.00, 07.2013

Error number	Error class	Description	Cause	Correctives
E 7342	2	Encoder temperature limit reached Parameter `_SigLatched` Bit 16	The maximum permissible duty cycle is exceeded. The motor was not mounted properly, for example, it is thermally isolated. The motor is blocked or damaged so that more current is used than under normal conditions. The ambient temperature is too high.	Reduce the duty cycle, for example, reduce acceleration. Supply additional cooling, for example, use a fan. Mount the motor in such a way as to increase thermal conductivity. Use a differently rated drive or motor. Replace the motor if it is damaged.
E 7343	0	Warning: Absolute position is different from incremental position Parameter `_WarnLatched` Bit 16	- Encoder is subject to EMC interference. - Motor encoder is inoperative.	Check wiring and shield connection of encoder cable, replace motor.
E 7344	3	Absolute position is different from incremental position Parameter `_SigLatched` Bit 16	- Encoder is subject to EMC interference. - Motor encoder is inoperative.	Check wiring and shield connection of encoder cable, replace motor.
E 7345	0	Amplitude of analog signals too high, limit of AD conversion exceeded	Encoder signals subject to EMC interference (shield connection, cabling, etc.). Encoder inoperative.	Check cabling and shield connection. Replace encoder.
E 7346	4	System error: Encoder not ready Parameter `_SigLatched` Bit 16		Check wiring and shield connection of encoder cable. Contact Technical Support.
E 7347	0	System error: Position initialization not possible	Analog and digital encoder signals subject to massive interference.	Reduce encoder signal interference, check shield connection, etc. Contact Technical Support.
E 7348	3	Timeout reading encoder temperature Parameter `_SigLatched` Bit 16	Encoder without temperature sensor	Check wiring and shield connection of encoder cable. Contact Technical Support.
E 7349	0	Discrepancy between absolute and analog encoder phases	Analog encoder signals are subject to interference. Encoder inoperative.	Check wiring and shield connection of encoder cable. Replace motor. Contact Technical Support.
E 734A	3	Amplitude of analog signals from encoder too high, signals are clipped Parameter `_SigLatched` Bit 16	Incorrect encoder wiring. Encoder hardware interface inoperative.	
E 734B	0	Signal position evaluation of analog encoder inoperative Parameter `_WarnLatched` Bit 16	Incorrect encoder wiring. Encoder hardware interface inoperative.	
E 734C	3	Error with quasi absolute position Parameter `_SigLatched` Bit 16	The motor shaft may have been moved while the drive was shut down. A quasi absolute position has been detected that is not within the permissible motor shaft deviation range.	If the quasi absolute function is active, only shut down the drive if the motor is at a standstill and do not move the motor shaft when the drive is off.
E 734D	0	Index pulse is not available for the encoder Parameter `_WarnLatched` Bit 16		
E 7500	0	RS485/Modbus: Overrun error Parameter `_WarnLatched` Bit 5	EMC; cabling problem.	Check cables.

0198441113956, V1.00, 07.2013

Error number	Error class	Description	Cause	Correctives
E 7501	0	RS485/Modbus: Framing error Parameter `_WarnLatched` Bit 5	EMC; cabling problem.	Check cables.
E 7502	0	RS485/Modbus: Parity error Parameter `_WarnLatched` Bit 5	EMC; cabling problem.	Check cables.
E 7503	0	RS485/Modbus: Receive error Parameter `_WarnLatched` Bit 5	EMC; cabling problem.	Check cables.
E 7623	0	Absolute encoder signal is not available Parameter `_WarnLatched` Bit 22	There is no encoder available at the input specified via the parameter ENC_abs_source.	Check wiring, check encoder. Change the value of the parameter ENC_abs_source.
E 7625	0	Not possible to set the absolute position for encoder 1. Parameter `_WarnLatched` Bit 22	There is no encoder connected to the input for encoder 1.	Connect an encoder to the input for encoder 1 before trying to set the absolute position directly via ENC1_abs_pos.
E 7701	4	System error: Timeout during connection to power stage Parameter `_SigLatched` Bit 31		Contact Technical Support.
E 7702	4	System error: Invalid data received from power stage Parameter `_SigLatched` Bit 31		Contact Technical Support.
E 7703	4	System error: Data exchange with power stage lost Parameter `_SigLatched` Bit 31		Contact Technical Support.
E 7704	4	System error: Exchange of identification data from power stage not successful Parameter `_SigLatched` Bit 31		Contact Technical Support.
E 7705	4	System error: Checksum identification data from power stage incorrect Parameter `_SigLatched` Bit 31		Contact Technical Support.
E 7706	4	System error: No identification frame received from power stage Parameter `_SigLatched` Bit 31		Contact Technical Support.
E 7707	4	System error: Type of power stage and manufacture data do not match		Contact Technical Support.
E 7708	4	PIC voltage supply too low Parameter `_SigLatched` Bit 31		Contact Technical Support.
E 7709	4	System error: Invalid numbers of data received Parameter `_SigLatched` Bit 31		Contact Technical Support.
E 770A	2	PIC received data with incorrect parity Parameter `_SigLatched` Bit 31		Contact Technical Support.
E 770B	2	Motor has been changed (different type of power stage) Parameter `_SigLatched` Bit 31	Detected power stage type is different from previously detected power stage.	Confirm the change.

0198441113956, V1.00, 07.2013

Error number	Error class	Description	Cause	Correctives
E A065	0	Parameters cannot be written Parameter `_WarnLatched` Bit 4	A data set is still active.	Wait until the currently active data set is terminated.
E A300	-	Braking procedure after HALT request still active	HALT was removed too soon. New command was sent before motor standstill was reached after a HALT request.	Wait for complete stop before removing HALT signal. Wait until motor has come to a complete standstill.
E A301	-	Drive in operating state Quick Stop Active	Error with error class 1 occurred. Drive stopped with Quick Stop.	
E A302	1	Stop by positive limit switch Parameter `_SigLatched` Bit 1	The positive limit switch was activated because movement range was exceeded, misoperation of limit switch or signal disturbance.	Check application. Check limit switch function and connection.
E A303	1	Stop by negative limit switch Parameter `_SigLatched` Bit 1	The negative limit switch was activated because movement range was exceeded, misoperation of limit switch or signal disturbance.	Check application. Check limit switch function and connection.
E A304	1	Stop by reference switch Parameter `_SigLatched` Bit 1		
E A305	-	Power stage cannot be enabled in the current operating state	Fieldbus: An attempt was made to enable the power stage in the operating state Not Ready To Switch On.	Refer to the state diagram.
E A306	1	Stop by user-initiated software stop Parameter `_SigLatched` Bit 3	Drive is in operating state Quick Stop Active due to a software stop request. The activation of a new operating mode is not possible, the error code is sent as the response to the activation command.	Clear break condition with command Fault Reset.
E A307	-	Interruption by internal software stop	In the operating mode Homing and Jog, the movement is internally interrupted by an internal software stop. The activation of a new operating mode is not possible, the error code is sent as the response to the activation command.	Clear break condition with command Fault Reset.
E A308	-	Drive is in operating state Fault or Fault Reaction Active	Error with error class 2 or higher occurred.	Check error code (HMI or commissioning software), remove error condition and clear error with command Fault Reset.
E A309	-	Drive not in operating state Operation Enabled	A command was sent that requires the drive to be in the operating state Operation Enabled was sent (for example, a command to change the operating mode).	Set drive to operating state Operation Enabled and repeat the command.
E A310	-	Power stage not enabled	Command cannot be used because the power stage is not enabled (operating state Operation Enabled or Quick Stop Active).	Set drive to an operating state in which the power stage is enabled, refer to the state diagram.

0198441113956, V1.00, 07.2013

Error number	Error class	Description	Cause	Correctives
E A311	-	Operating mode change active	A start request for an operating mode has been received while a change of the operating mode was active.	Wait until the operating mode change has terminated before triggering a start request for another operating mode.
E A312	-	Profile generation interrupted		
E A313	-	Position overtraveled, reference point is therefore no longer defined (ref_ok=0)	The movement range limits were exceeded which resulted in a loss of the reference point. An absolute movement cannot be made before a new reference point is defined.	Define a new reference point by means of the operating mode Homing.
E A314	-	No reference point	Command needs a defined reference point (ref_ok=1).	Define a new reference point by means of the operating mode Homing.
E A315	-	Homing active	Command cannot be used while the operating mode Homing is active.	Wait until reference movement is finished.
E A316	-	Overflow during calculation of acceleration		
E A317	-	Motor is not at a standstill	Command sent which is not permissible when the motor is not at a standstill. For example: - Change of software limit switches - Change of handling of monitoring signals - Setting of reference point - Teach in of data set	Wait until the motor has come to a standstill (x_end = 1).
E A318	-	Operating mode active (x_end=0)	Activation of a new operating mode is not possible while the current operating mode is still active.	Wait until the command in the operating mode has finished (x_end=1) or terminate current operating mode with HALT command.
E A319	1	Manual tuning/Autotuning: Movement out of permissible range Parameter `_SigLatched` Bit 2	The movement exceeds the parameterized maximum permissible movement range.	Check permissible movement range value and time interval.
E A31A	-	Manual tuning/Autotuning: Amplitude/offset too high	Amplitude plus offset for tuning exceed internal velocity or current limitation.	Choose lower amplitude and offset values.
E A31B	-	Halt requested	Command not permissible while Halt is requested.	Clear Halt request and repeat command.
E A31C	-	Invalid position setting with software limit switch	Value for negative (positive) software limit switch is greater (less) than value for positive (negative) software limit switch.	Set correct position values.
E A31D	-	Velocity range exceeded (parameter CTRL_v_max, M_n_max)	The velocity was set to a value greater than the maximum permissible velocity in parameter CTRL_v_max or M_n_max, whichever is lower.	If the value of parameter M_n_max is greater than the value of parameter CTRL_v_max, increase the value of parameter CTRL_v_max or reduce the velocity value.

0198441113956, V1.00, 07.2013

Error number	Error class	Description	Cause	Correctives
E A31E	1	Stop by positive software limit switch Parameter `_SigLatched` Bit 2	Not possible to execute command because positive software limit switch was overtraveled.	Return to the permissible range.
E A31F	1	Stop by negative software limit switch Parameter `_SigLatched` Bit 2	Not possible to execute command because negative software limit switch was overtraveled.	Return to the permissible range.
E A320	par.	Following error Parameter `_SigLatched` Bit 8	External load or acceleration are too high.	Reduce external load or acceleration. Use a differently rated drive, if necessary. Error response can be adjusted via parameter ErrorResp_p_dif.
E A322	-	Error in ramp calculation		
E A323	3	System error: Processing error during generation of profile (see additional info for details)		
E A324	1	Error during homing (additional info = detailed error number) Parameter `_SigLatched` Bit 4	Homing movement was stopped by an error, the detailed reason is indicated by the additional info in the error buffer.	Possible sub error codes: E A325, E A326, E A327, E A328 or E A329.
E A325	1	Limit switch to be approached not enabled Parameter `_SigLatched` Bit 4	Homing to positive limit switch or negative limit switch is disabled.	Enable limit switch via 'IOsigLimP' or 'IOsigLimN'.
E A326	1	Reference switch not found between positive limit switch and negative limit switch Parameter `_SigLatched` Bit 4	Reference switch inoperative or not correctly connected.	Check the function and wiring of the reference switch.
E A329	1	More than one signal positive limit switch/negative limit switch/reference switch signal active Parameter `_SigLatched` Bit 4	Reference switch or limit switch not connected correctly or supply voltage for switches too low.	Check the wiring and 24VDC supply voltage.
E A32A	1	Positive limit switch triggered with negative direction of movement Parameter `_SigLatched` Bit 4	Start reference movement with negative direction (for example reference movement to negative limit switch) and activate the positive limit switch (switch in opposite direction of movement).	Check correct connection and function of limit switch. Activate a jog movement with negative movement (target limit switch must be connected to the negative limit switch).
E A32B	1	Negative limit switch triggered with positive direction of movement Parameter `_SigLatched` Bit 4	Start reference movement with positive direction (for example reference movement to positive limit switch) and activate the negative limit switch (switch in opposite direction of movement).	Check correct connection and function of limit switch. Activate a jog movement with positive movement (target limit switch must be connected to the positive limit switch).
E A32C	1	Reference switch error (switch signal briefly enabled or switch overtraveled) Parameter `_SigLatched` Bit 4	Switch signal disturbance. Motor subjected to vibration or shock when stopped after activation of the switch signal.	Check supply voltage, cabling and function of switch. Check motor reaction after stopping and optimize controller settings.

0198441113956, V1.00, 07.2013

Error number	Error class	Description	Cause	Correctives
E A32D	1	Positive limit switch error (switch signal briefly enabled or switch overtraveled) Parameter `_SigLatched` Bit 4	Switch signal disturbance. Motor subjected to vibration or shock when stopped after activation of the switch signal.	Check supply voltage, cabling and function of switch. Check motor reaction after stopping and optimize controller settings.
E A32E	1	Negative limit switch error (switch signal briefly enabled or switch overtraveled) Parameter `_SigLatched` Bit 4	Switch signal disturbance. Motor subjected to vibration or shock when stopped after activation of the switch signal.	Check supply voltage, cabling and function of switch. Check motor reaction after stopping and optimize controller settings.
E A32F	1	Index pulse not found Parameter `_SigLatched` Bit 4	Index pulse signal not connected or not working properly.	Check index pulse signal and connection.
E A330	0	Reference movement to index pulse cannot be reproduced. Index pulse is too close to the switch Parameter `_WarnLatched` Bit 4	The position difference between the index pulse and the switching point is insufficient.	Increase the distance between the index pulse and the switching point. If possible, the distance between the index pulse and the switching point should be a half motor revolution.
E A332	1	Jog error (additional info = detailed error number) Parameter `_SigLatched` Bit 4	Jog movement was stopped by error.	For additional info, check the detailed error number in the error buffer.
E A333	3	System error: Invalid internal selection		
E A334	2	Timeout Standstill Window monitoring	Position deviation after movement greater than standstill window. This may have been caused by an external load.	Check load. Check settings for standstill window (parameter MON_p_win, MON_p_winTime and MON_p_winTout). Optimize controller settings.
E A336	1	System error: Jerk limitation with position offset after end of movement (additional info = offset in Inc.)		
E A337	0	Operating mode cannot be continued Parameter `_WarnLatched` Bit 4	Continuation of interrupted movement in operating mode Profile Position is not possible because another operating mode had been active in the meantime. In the operating mode Motion Sequence, continuation is not possible if a motion blend was interrupted.	Restart the operating mode.
E A338	0	Operating mode unavailable Parameter `_WarnLatched` Bit 4	The selected operating mode is not available.	
E A33A	0	Reference point is not defined (ref_ok=0) Parameter `_WarnLatched` Bit 4	No reference point defined by means of operating mode Homing. Reference position lost because the movement range has been left. Motor does not have an absolute encoder.	Use operating mode Homing to define a reference point. Use a motor with an absolute encoder.

0198441113956, V1.00, 07.2013

Error number	Error class	Description	Cause	Correctives
E A33C	0	Function not available in current operating mode Parameter `_WarnLatched` Bit 4	Activation of a function which is not available in the current operating mode. Example: Start of backlash compensation while autotuning/manual tuning is active.	
E A33D	0	Motion blend is already active Parameter `_WarnLatched` Bit 4	Change of motion blend during the current motion blend (end position of motion blend not yet reached)	Wait for the motion blend to complete before setting the next position.
E A33E	0	No movement activated Parameter `_WarnLatched` Bit 4	Activation of a motion blend without movement.	Start a movement before the motion blend is activated.
E A33F	0	Position of motion blend movement not in the range of the active movement Parameter `_WarnLatched` Bit 4	The position of the motion blend is outside of the current movement range.	Check the position of the motion blend and the current movement range.
E A341	0	Position of motion blend has already been passed Parameter `_WarnLatched` Bit 4	The current movement has passed beyond the position of the motion blend.	
E A342	1	Target velocity was not reached at motion blend position. Parameter `_SigLatched` Bit 4	The position of the motion blend was overtraveled, the target velocity was not reached.	Reduce the ramp velocity so that the target velocity is reached at the position of the motion blend.
E A343	0	Processing only possible with linear ramp Parameter `_WarnLatched` Bit 4	Motion blend position was set with a non-linear ramp.	Set a linear ramp type.
E A347	0	Threshold for position deviation warning reached Parameter `_WarnLatched` Bit 8	External load or acceleration are too high.	Reduce external load or acceleration. Threshold can be adjusted via the parameter MON_p_dif_warn.
E A349	-	Position setting exceeds system limits	Position scaling of POSscaleDenom and POSscaleNum results in a scaling factor that is too small.	Change POSscaleDenom and POSscaleNum in such a way as to increase the resulting scaling factor.
E A34A	-	Velocity setting exceeds system limits	The velocity scaling of 'VELscaleDenom' and 'VELscaleNum' results in a scaling factor that is too small. The velocity has been set to a value greater than the maximum possible velocity (the maximum velocity is 13200 rpm).	Change 'VELscaleDenom' and 'VELscaleNum' in such a way as to increase the resulting scaling factor.
E A34B	-	Ramp setting exceeds system limits	The ramp scaling of 'RAMPscaleDenom' and 'RAMPscaleNum' results in a scaling factor that is too small.	Change of 'RAMPscaleDenom' and 'RAMPscaleNum' in such a way as to increase the resulting scaling factor.
E A34C	-	Resolution of scaling too high (range exceeded)		
E A34D	-	The function is not possible when Modulo is active.	The function cannot be executed when Modulo is active.	Deactivate Modulo to use the function.

0198441113956, V1.00, 07.2013

Error number	Error class	Description	Cause	Correctives
E A34E	-	Target value for absolute movement not possible with defined modulo range and modulo handling.	If parameter 'MOD_Absolute' is set to: Shortest Distance: Target value is not in defined modulo range. Positive Direction: Target value is less than parameter 'MOD_Min'. Negative Direction: Target value is greater than parameter 'MOD_Max'.	Set a correct target value for absolute movement.
E A34F	-	Target position outside of modulo range. Corresponding movement within range performed instead.	The current setting of parameter 'MOD_AbsMultiRng' only allows for a movement within the modulo range.	Change the parameter 'MOD_AbsMultiRng' to allow for movements beyond the modulo range.
E A351	1	Function cannot be executed with the current position scaling factor Parameter `_SigLatched` Bit 4	The positions scaling factor is set to a value less than 1rev/131072usr_p, which is less than the internal resolution. In the operating mode Cyclic Synchronous Position, the resolution is not set to 1rev/131072usr_p.	Use a different position scaling factor or deactivate the selected function.
E A355	1	Error during relative movement after capture (additional info = detailed error number) Parameter `_SigLatched` Bit 4	Movement was stopped by error.	Check the error memory or the parameter _LastError_Qual for additional information.
E A356	0	Function Relative Movement After Capture not assigned to a digital input.		Assign the function Relative Movement After Capture to a digital input.
E A357	-	Braking procedure still active	Command is not permissible when a braking procedure is active.	Wait until motor has come to a complete standstill.
E A358	1	Target position overtraveled with function Relative Movement After Capture Parameter `_SigLatched` Bit 4	Stopping distance too small or velocity too high at the point in time of the capture event.	Reduce the velocity.
E A359	0	Request cannot be processed since the relative movement after capture is still active		
E A35B	0	Modulo cannot be activated Parameter `_WarnLatched` Bit 4	The set operating mode does not support Modulo.	
E B100	0	RS485/Modbus: Unknown service Parameter `_WarnLatched` Bit 5	Unsupported Modbus service was received.	Check application on the Modbus master.
E B200	0	RS485/Modbus: Protocol error Parameter `_WarnLatched` Bit 5	Logical protocol error: Wrong length or unsupported subfunction.	Check application on the Modbus master.
E B201	2	RS485/Modbus: Connection monitoring error Parameter `_SigLatched` Bit 5	Connection monitoring has detected an interruption of the connection.	Check all connections and cables used for data exchange. Verify that the device is on.
E B202	0	RS485/Modbus: Connection monitoring warning Parameter `_WarnLatched` Bit 5	Connection monitoring has detected an interruption of the connection.	Check all connections and cables used for data exchange. Verify that the device is on.

0198441113956, V1.00, 07.2013

Error number	Error class	Description	Cause	Correctives
E B203	0	RS485/Modbus: Incorrect number of monitor objects Parameter `_WarnLatched` Bit 5		
E B600	2	Ethernet: Network overload Parameter `_SigLatched` Bit 21		
E B601	2	Ethernet: Loss of Ethernet carrier Parameter `_SigLatched` Bit 21		
E B602	2	Ethernet: Duplicate IP address Parameter `_SigLatched` Bit 21		
E B603	2	Ethernet: No valid IP address Parameter `_SigLatched` Bit 21		
E B604	0	Ethernet: DHCP/BOOTP Parameter `_WarnLatched` Bit 21	IP assignment via DHCP/ BOOTP unsuccessfull. Effort was given up after 2 minutes.	Set up a properly working DHCP or BOOTP server or assign the IP address manually.
E B605	2	Ethernet FDR: Unconfigured error Parameter `_SigLatched` Bit 21		
E B606	2	Ethernet FDR: Irrecoverable error Parameter `_SigLatched` Bit 21		
E B607	2	Ethernet: I/O data idle Parameter `_SigLatched` Bit 21	PLC has been stopped, but I/O data keeps being transmitted.	Disable power stage of connected drives before stopping the PLC.
E B610	2	EtherCAT: Fieldbus watchdog error (additional info = detailed error number) Parameter `_SigLatched` Bit 21	EtherCAT frames are lost, for example, due to cable errors or master errors.	Verify correct cabling and shield connection. Check diagnostics info of EtherCAT master.
E B611	2	EtherCAT: Invalid I/O data (additional info = detailed error number) Parameter `_SigLatched` Bit 21	Incorrect input data or output data (such as object length, object type)	Check for correct PDO configuration (length, objects, etc.).
E B612	2	EtherCAT: Link lost at input and output port Parameter `_SigLatched` Bit 21	EtherCAT cable error. Link to connected devices lost.	Check link LEDs. Check cables and verify that the devices connected to input port and output port operate. Use EtherCAT master diagnostics for further troubleshooting.
E B700	0	Drive Profile Lexium: On activation of the profile, no dmControl, refA or refB has been mapped.	dmControl, refA or refB have not been mapped.	dmControl, refA or refB must be mapped.
E B702	1	Insufficient velocity resolution due to velocity scaling	Due to the configured velocity scaling, the velocity resolution in REFA16 is insufficient.	Change the velocity scaling.

0198441113956, V1.00, 07.2013

11 Parameters

11

This chapter provides an overview of the parameters which can be used for operating the product.

⚠ WARNING

UNINTENDED BEHAVIOR CAUSED BY PARAMETERS

Unsuitable parameter values may trigger unintended movements or signals, damage parts and disable monitoring functions.

- Never change a parameter unless you understand its meaning.
- Only start the system if there are no persons or obstructions in the hazardous area.
- When commissioning, carefully run tests for all operating states and potential error situations.

Failure to follow these instructions can result in death, serious injury or equipment damage.

0198441113956, V1.00, 07.2013

11.1 Representation of the parameters

The way parameters are shown provides information required for unique identification, the default values and the properties of a parameter.

Structure of the parameter representation:

Parameter name	Description	Unit Minimum value Factory setting Maximum value	Data type R/W Persistent Expert	Parameter address via fieldbus
ABCDE	Short description (cross reference) Selection values **2 / Abc2**: Explanation 2 Description and details	A_{pk} 0.00 3.00 300.00	UINT32 R/W per. -	Fieldbus $1234{:}5_h$

Parameter name The parameter name uniquely identifies a parameter.

Description

Short description (cross reference)
The short description contains information on the parameter and a cross reference to the page that describes the use of the parameter.

Selection values:
In the case of parameters which offer a selection of settings, the value to be entered via the fieldbus and the designation of the value for entry via the commissioning software are specified.
1 = Value for input via fieldbus
Abc1 = Designation for entry via the commissioning software

Further description and details
Provides further information on the parameter.

Unit The unit of the value.

Minimum value The minimum value which can be entered.

Factory setting Factory settings when the product is shipped

Maximum value The maximum value which can be entered.

Data type If the minimum and the maximum values are not explicitly indicated, the valid range of values is determined by the data type.

Data type	Byte	Minumum value	Maximum value
INT8	1 Byte / 8 Bit	-128	127
UINT8	1 Byte / 8 Bit	0	255
INT16	2 Byte / 16 Bit	-32768	32767
UINT16	2 Byte / 16 Bit	0	65535
INT32	4 Byte / 32 Bit	-2147483648	2147483647
UINT32	4 Byte / 32 Bit	0	4294967295

R/W Indicates read and/or write values

"R/" values can only be read
"R/W" values can be read and written.

Persistent "per." indicates whether the value of the parameter is persistent, i.e. whether it remains in the memory after the device is switched off .

0198441113956, V1.00, 07.2013

When changing a value via commissioning software or fieldbus, the user must explicitly store the changed value in the persistent memory.

11.1.1 Decimal numbers for fieldbus

Entering values

Please note that parameter values are entered via the fieldbus without a decimal point. All decimal places must be entered.

Input examples:

Value	Commissioning software	Fieldbus
20	20	20
5.0	5.0	50
23.57	23.57	2357
1.000	1.000	1000

0198441113956, V1.00, 07.2013

11.2 List of parameters

Parameter name	Description	Unit Minimum value Factory setting Maximum value	Data type R/W Persistent Expert	Parameter address via field-bus
_AccessInfo	Current access channel Low byte: Value 0: Used by channel in high byte Value 1: Exclusively used by channel in high byte High byte: Current assignment of access channel Value 0: Reserved Value 1: I/O Value 2: HMI Value 3: Modbus RS485 Value 4: Fieldbus main channel Values 5 ... 12: Modbus TCP, CANopen second SDO or Profibus master class 2 Values 13 ... 28: Ethenet/IP explicit channels	- - - -	UINT16 UINT16 R/- - -	CANopen 3001:C_h Modbus 280
_actionStatus	Action word Signal state: 0: Not activated 1: Activated Bit assignments: Bit 0: Warning (error class 0) Bit 1: Error class 1 Bit 2: Error class 2 Bit 3: Error class 3 Bit 4: Error class 4 Bit 5: Reserved Bit 6: Motor is at a standstill (_n_act < 9) Bit 7: Motor movement in positive direction Bit 8: Motor movement in negative direction Bit 9: Assignment can be set via parameter DPL_intLim Bit 10: Assignment can be set via parameter DS402intLim Bit 11: Profile generator idle (reference velocity is 0) Bit 12: Profile generator decelerates Bit 13: Profile generator accelerates Bit 14: Profile generator moves at constant speed Bit 15: Reserved	- - - -	UINT16 UINT16 R/- - -	CANopen 301C:4_h Modbus 7176
_AT_J	Moment of inertia of the entire system (162) Is automatically calculated during Autotuning. In increments of 0.1 kg cm^2.	kg cm^2 0.1 0.1 6553.5	UINT16 UINT16 R/- per. -	CANopen 302F:C_h Modbus 12056
_AT_M_friction	Friction torque of the system (162) Is determined during Autotuning. In increments of 0.01 A_{rms}.	A_{rms} - - -	UINT16 UINT16 R/- - -	CANopen 302F:7_h Modbus 12046

0198441113956, V1.00, 07.2013

Parameter name	Description	Unit Minimum value Factory setting Maximum value	Data type R/W Persistent Expert	Parameter address via field-bus
_AT_M_load	Constant load torque (162) Is determined during Autotuning. In increments of 0.01 A_{rms}.	A_{rms} - - -	INT16 INT16 R/- - -	CANopen 302F:8h Modbus 12048
_AT_progress	Progress of Autotuning (161)	% 0 0 100	UINT16 UINT16 R/- - -	CANopen 302F:Bh Modbus 12054
_AT_state	Autotuning status (161) Bit assignments: Bits 0 ... 10: Last processing step Bit 13: auto_tune_process Bit 14: auto_tune_end Bit 15: auto_tune_err	- - - -	UINT16 UINT16 R/- - -	CANopen 302F:2h Modbus 12036
_Cap1Count	Capture input 1 event counter (295) Counts the capture events. The event counter is reset when capture input 1 is activated.	- - - -	UINT16 UINT16 R/- - -	CANopen 300A:8h Modbus 2576
_Cap1CountCons	Capture input 1 event counter (consistent) Counts the capture events. The event counter is reset when capture input 1 is activated. By reading this parameter, the parameter "_Cap1PosCons" is updated and locked so it cannot be changed. Both parameter values remain consistent.	- - - -	UINT16 UINT16 R/- - -	CANopen 300A:17h Modbus 2606
_Cap1Pos	Capture input 1 captured position (295) Captured position at the time of the "capture signal". The captured position is re-calculated after "Position Setting" or "Reference Movement".	usr_p - - -	INT32 INT32 R/- - -	CANopen 300A:6h Modbus 2572
_Cap1PosCons	Capture input 1 captured position (consistent) Captured position at the time of the "capture signal". The captured position is re-calculated after "Position Setting" or "Reference Movement". By reading the parameter "_Cap1CountCons", this parameter is updated and locked so it cannot be changed. Both parameter values remain consistent.	usr_p - - -	INT32 INT32 R/- - -	CANopen 300A:18h Modbus 2608
_Cap2Count	Capture input 2 event counter (295) Counts the capture events. The event counter is reset when capture input 2 is activated.	- - - -	UINT16 UINT16 R/- - -	CANopen 300A:9h Modbus 2578

0198441113956, V1.00, 07.2013

Parameter name	Description	Unit Minimum value Factory setting Maximum value	Data type R/W Persistent Expert	Parameter address via field-bus
_Cap2CountCons	Capture input 2 event counter (consistent) Counts the capture events. The event counter is reset when capture input 2 is activated. By reading this parameter, the parameter "_Cap2PosCons" is updated and locked so it cannot be changed. Both parameter values remain consistent.	- - - -	UINT16 UINT16 R/- - -	CANopen 300A:19h Modbus 2610
_Cap2Pos	Capture input 2 captured position (295) Captured position at the time of the "capture signal". The captured position is re-calculated after "Position Setting" or "Reference Movement".	usr_p - - -	INT32 INT32 R/- - -	CANopen 300A:7h Modbus 2574
_Cap2PosCons	Capture input 2 captured position (consistent) Captured position at the time of the "capture signal". The captured position is re-calculated after "Position Setting" or "Reference Movement". By reading the parameter "_Cap2CountCons", this parameter is updated and locked so it cannot be changed. Both parameter values remain consistent.	usr_p - - -	INT32 INT32 R/- - -	CANopen 300A:1Ah Modbus 2612
_CapStatus	Status of the capture inputs (295) Read access: Bit 0: Position captured via input CAP1 Bit 1: Position captured via input CAP2	- - - -	UINT16 UINT16 R/- - -	CANopen 300A:1h Modbus 2562
_Cond_State4	Conditions for transition to operating state Ready To Switch On Signal state: 0: Condition not met 1: Condition met Bit 0: DC bus or mains voltage Bit 1: Inputs for safety function Bit 2: No configuration download ongoing Bit 3: Velocity greater than limit value Bit 4: Absolut position has been set Bit 5: Holding brake not manually released	- - - -	UINT16 UINT16 R/- - -	CANopen 301C:26h Modbus 7244
_CTRL_ActParSet	Active controller parameter set (165) Value 1: Controller parameter set 1 is active Value 2: Controller parameter set 2 is active A controller parameter set is active after the time for the parameter switching (CTRL_ParChgTime) has elapsed.	- - - -	UINT16 UINT16 R/- - -	CANopen 3011:17h Modbus 4398
_CTRL_KPid	Current controller d component P gain This value is calculated on the basis of the motor parameters. In increments of 0.1 V/A. Changed settings become active immediately.	V/A 0.5 - 1270.0	UINT16 UINT16 R/- per. -	CANopen 3011:1h Modbus 4354

0198441113956, V1.00, 07.2013

Parameter name	Description	Unit Minimum value Factory setting Maximum value	Data type R/W Persistent Expert	Parameter address via field-bus
_CTRL_KPiq	Current controller q component P gain This value is calculated on the basis of the motor parameters. In increments of 0.1 V/A. Changed settings become active immediately.	V/A 0.5 - 1270.0	UINT16 UINT16 R/- per. -	CANopen 3011:3h Modbus 4358
_CTRL_TNid	Current controller d component integral action time This value is calculated on the basis of the motor parameters. In increments of 0.01 ms. Changed settings become active immediately.	ms 0.13 - 327.67	UINT16 UINT16 R/- per. -	CANopen 3011:2h Modbus 4356
_CTRL_TNiq	Current controller q component integral action time This value is calculated on the basis of the motor parameters. In increments of 0.01 ms. Changed settings become active immediately.	ms 0.13 - 327.67	UINT16 UINT16 R/- per. -	CANopen 3011:4h Modbus 4360
_DataError	Error code for synchronous errors (DE bit) Drive Profile Lexium: Manufacturer-specific error code that caused the DataError bit to be set. Usually, this is an error that was caused by the changing of an data value within the process data. The DataError bit relates to MT-independent parameters.	- - - -	UINT16 UINT16 R/- - -	CANopen 301B:1Bh Modbus 6966
_DataErrorInfo	Additional error information of a DataError (DE bit) Drive Profile Lexium: Indicates the parameter of the mapping that caused the DE bit to be set. The DE bit is set if MT-independent parameters of the current mapping cause an error in connection with a write command. Example: 1 = First mapped parameter 2 = Second mapped parameter etc.	- - - -	UINT16 UINT16 R/- - -	CANopen 301B:1Dh Modbus 6970

0198441113956, V1.00, 07.2013

Parameter name	Description	Unit Minimum value Factory setting Maximum value	Data type R/W Persistent Expert	Parameter address via field-bus
_DCOMopmd_act	Active operating mode (194) **-6 / Manual Tuning / Autotuning**: Manual Tuning / Autotuning **-1 / Jog**: Jog **0 / Reserved**: Reserved **1 / Profile Position**: Profile Position **3 / Profile Velocity**: Profile Velocity **4 / Profile Torque**: Profile Torque **6 / Homing**: Homing **7 / Interpolated Position**: Interpolated Position **8 / Cyclic Synchronous Position**: Cyclic Synchronous Position **9 / Cyclic Synchronous Velocity**: Cyclic Synchronous Velocity **10 / Cyclic Synchronous Torque**: Cyclic Synchronous Torque	- -6 - 10	INT8 INT16 R/- - -	CANopen 6061:0_h Modbus 6920
_DCOMstatus	DriveCom status word (189) Bit assignments: Bits 0 ... 3: Status bits Bit 4: Voltage enabled Bits 5 ... 6: Status bits Bit 7: Warning Bit 8: HALT request active Bit 9: Remote Bit 10: Target reached Bit 11: Assignment can be set via parameter DS402intLim Bit 12: Operating mode-specific Bit 13: x_err Bit 14: x_end Bit 15: ref_ok	- - - -	UINT16 UINT16 R/- - -	CANopen 6041:0_h Modbus 6916
_DEV_T_current	Current device temperature	°C - - -	INT16 INT16 R/- - -	CANopen 301C:12_h Modbus 7204
_DPL_BitShiftRefA16	Bit shift for RefA16 for Drive Profile Lexium Velocity scaling may lead to values that cannot be represented as 16 bit values. If RefA16 is used, this parameter indicates the number of bits by which the value is shifted so that transmission is possible. The master must consider this value prior to transmission and shift the bits to the right accordingly. The number of bits is recalculated each time the power stage is enabled. Changed settings become active immediately.	- 0 0 12	UINT16 UINT16 R/- - -	CANopen 301B:5_h Modbus 6922
_DPL_driveInput	Drive Profile Lexium driveInput	- - - -	UINT16 UINT16 R/- - -	CANopen 301B:28_h Modbus 6992

0198441113956, V1.00, 07.2013

Parameter name	Description	Unit Minimum value Factory setting Maximum value	Data type R/W Persistent Expert	Parameter address via field-bus
_DPL_driveStat	Drive Profile Lexium driveStat	- - - -	UINT16 UINT16 R/- - -	CANopen 301B:25h Modbus 6986
_DPL_mfStat	Drive Profile Lexium mfStat	- - - -	UINT16 UINT16 R/- - -	CANopen 301B:26h Modbus 6988
_DPL_motionStat	Drive Profile Lexium motionStat	- - - -	UINT16 UINT16 R/- - -	CANopen 301B:27h Modbus 6990
_ECAT_DIPswitches	EtherCAT Identification value set via DIP switches (138)	- 0 0 65535	UINT16 UINT16 R/- - -	CANopen 3045:Bh Modbus 17686
_ECAT_Identification	Currently set value of the EtherCAT Identification (138)	- 0 0 65535	UINT16 UINT16 R/- - -	CANopen 3045:Ch Modbus 17688
_ECATaddress	Actual EtherCAT address Currently used EtherCAT slave address set by the master. Changed settings become active immediately.	- - 1 -	UINT16 UINT16 R/- - -	CANopen 3045:7h Modbus 17678
_ECATslavestate	EtherCAT slave state **1 / Init**: Init **2 / PreOp**: Pre-Operational **3 / Boot**: Bootstrap **4 / SafeOp**: Safe-Operational **8 / Op**: Operational	- - 1 -	UINT16 UINT16 R/- - -	CANopen 3045:2h Modbus 17668
_ERR_class	Error class (357) Value 0: Warning (no response) Value 1: Error class 1 Value 2: Error class 2 Value 3: Error class 3 Value 4: Error class 4	- 0 - 4	UINT16 UINT16 R/- - -	CANopen 303C:2h Modbus 15364
_ERR_DCbus	DC bus voltage at error time (358) In increments of 0.1 V.	V - - -	UINT16 UINT16 R/- - -	CANopen 303C:7h Modbus 15374
_ERR_enable_cycl	Number of cycles of enabling the power stage at error time (358) Number of cycles of enabling the power stage from the time the power supply (control voltage) was switched on to the time the error occurred.	- - - -	UINT16 UINT16 R/- - -	CANopen 303C:5h Modbus 15370

0198441113956, V1.00, 07.2013

Parameter name	Description	Unit Minimum value Factory setting Maximum value	Data type R/W Persistent Expert	Parameter address via field-bus
_ERR_enable_time	Time between enabling of power stage and occurrence of the error (358)	s - - -	UINT16 UINT16 R/- - -	CANopen 303C:6_h Modbus 15372
_ERR_motor_I	Motor current at error time (357) In increments of 0.01 A_{rms}.	A_{rms} - - -	UINT16 UINT16 R/- - -	CANopen 303C:9_h Modbus 15378
_ERR_motor_v	Motor velocity at error time (358)	usr_v - - -	INT32 INT32 R/- - -	CANopen 303C:8_h Modbus 15376
_ERR_number	Error number (357) Reading this parameter copies the entire error entry (error class, time of occurrence of error, ...) to an intermediate memory from which the elements of the error can then be read. In addition, the read pointer of the error memory is automatically set to the next error entry.	- 0 - 65535	UINT16 UINT16 R/- - -	CANopen 303C:1_h Modbus 15362
_ERR_powerOn	Number of power on cycles (357)	- 0 - 4294967295	UINT32 UINT32 R/- - -	CANopen 303B:2_h Modbus 15108
_ERR_qual	Error additional information (357) This entry contains additional information on the error, depending on the error number. Example: a parameter address	- 0 - 65535	UINT16 UINT16 R/- - -	CANopen 303C:4_h Modbus 15368
_ERR_temp_dev	Temperature of device at error time (357)	°C - - -	INT16 INT16 R/- - -	CANopen 303C:B_h Modbus 15382
_ERR_temp_ps	Temperature of power stage at error time (357)	°C - - -	INT16 INT16 R/- - -	CANopen 303C:A_h Modbus 15380
_ERR_time	Error time (358) With reference to operating hours counter	s 0 - 536870911	UINT32 UINT32 R/- - -	CANopen 303C:3_h Modbus 15366

0198441113956, V1.00, 07.2013

Parameter name	Description	Unit Minimum value Factory setting Maximum value	Data type R/W Persistent Expert	Parameter address via field-bus
_ErrNumFbParSvc	Last error number of fieldbus parameter services Some fieldbus types only provide general error codes if a request for a parameter service is not successful. This parameter returns the vendor-specific error number of the last unsuccessful service. CANopen: SDO service EtherCAT: CoE SDO service EtherNet/IP: CIP explicit message service DeviceNet: CIP explicit message service Modbus TCP: FC3, FC16	- - - -	UINT16 UINT16 R/- - -	CANopen 3040:43h Modbus 16518
_fwNoSlot3	Firmware number of slot 3 Example: PR0912.00 The value is provided as a decimal value: 91200. NOTE: If no module is installed, the value 0 is returned.	- - - -	UINT32 UINT32 R/- - -	CANopen 3002:21h Modbus 578
_fwRevSlot3	Firmware revision of slot 3 The version format is XX.YY.ZZ. Part XX.YY is contained in parameter _fwVerSlot3. Part ZZ is used for quality evolution and contained in this parameter. NOTE: If no module is installed, the value 0 is returned. Example: V01.23.45 The value is provided as a decimal value: 45	- - - -	UINT16 UINT16 R/- - -	CANopen 3002:23h Modbus 582
_fwVersSlot3	Firmware version of slot 3 The version format is XX.YY.ZZ. Part XX.YY is contained in this parameter. Part ZZ is contained in parameter _fwRev-Slot3. NOTE: If no module is installed, the value 0 is returned. Example: V01.23.45 The value is provided as a decimal value: 123	- - - -	UINT16 UINT16 R/- - -	CANopen 3002:22h Modbus 580
_HMdisREFtoIDX_usr	Distance from switching point to index pulse (226) It allows to check the distance between the index pulse and the switching point and serves as a criterion for determining whether the reference movement with index pulse can be reproduced.	usr_p -2147483648 - 2147483647	INT32 INT32 R/- - -	CANopen 3028:Fh Modbus 10270

0198441113956, V1.00, 07.2013

Parameter name	Description	Unit Minimum value Factory setting Maximum value	Data type R/W Persistent Expert	Parameter address via field-bus
_HMdisREFtoIDX	Distance from switching point to index pulse (226) It allows to check the distance between the index pulse and the switching point and serves as a criterion for determining whether the reference movement with index pulse can be reproduced. The parameter _HMdisREFtoIDX_usr allows you to enter the value in user-defined units. In increments of 0.0001 revolution.	revolution - - -	INT32 INT32 R/- - -	CANopen 3028:C_h Modbus 10264
_I_act	Total motor current In increments of 0.01 A_{rms}.	A_{rms} - - -	INT16 INT16 R/- - -	CANopen 301E:3_h Modbus 7686
_Id_act_rms	Actual motor current (d component, field weakening) In increments of 0.01 A_{rms}.	A_{rms} - - -	INT16 INT16 R/- - -	CANopen 301E:2_h Modbus 7684
_Id_ref_rms	Reference motor current (d component, field weakening) In increments of 0.01 A_{rms}.	A_{rms} - - -	INT16 INT16 R/- - -	CANopen 301E:11_h Modbus 7714
_Imax_act	Currently effective current limitation Value of the currently effective current limitation. This is one of the following values (whichever is lowest): This is one of the following values (whichever is lowest): - CTRL_I_max (only during normal operation) - LIM_I_maxQSTP (only during Quick Stop) - LIM_I_maxHalt (only during Halt) - Current limitation via digital input - M_I_max (only if motor is connected) - PA_I_max Limitations caused by I2t monitoring are also taken into account. In increments of 0.01 A_{rms}.	A_{rms} - - -	UINT16 UINT16 R/- - -	CANopen 301C:28_h Modbus 7248
_Imax_system	Current limitation of the system This parameter specifies the maximum system current. This is the lower value of the maximum motor current and the maximum power stage current. If no motor is connected, only the maximum power stage current is considered in this parameter. In increments of 0.01 A_{rms}.	A_{rms} - - -	UINT16 UINT16 R/- - -	CANopen 301C:27_h Modbus 7246

0198441113956, V1.00, 07.2013

Parameter name	Description	Unit Minimum value Factory setting Maximum value	Data type R/W Persistent Expert	Parameter address via field-bus
_InvalidParam	Modbus address of parameter with invalid value In case of a configuration error, the Modbus address of the parameter with an invalid value is indicated here.	- - 0 -	UINT16 UINT16 R/- - -	CANopen 301C:6h Modbus 7180
_IO_act	Physical status of the digital inputs and outputs (144) Low byte: Bit 0: DI0 Bit 1: DI1 Bit 2: DI2 Bit 3: DI3 High byte: Bit 8: DQ0 Bit 9: DQ1	- - - -	UINT16 UINT16 R/- - -	CANopen 3008:1h Modbus 2050
_IO_DI_act	Status of digital inputs (144) Bit assignments: Bit 0: DI0 Bit 1: DI1 Bit 2: DI2 Bit 3: DI3 Bit 4: DI4 Bit 5: DI5	- - - -	UINT16 UINT16 R/- - -	CANopen 3008:Fh Modbus 2078
_IO_DQ_act	Status of digital outputs (144) Bit assignments: Bit 0: DQ0 Bit 1: DQ1	- - - -	UINT16 UINT16 R/- - -	CANopen 3008:10h Modbus 2080
_IO_STO_act	Status of the inputs for the safety function STO (144) Coding of the individual signals: Bit 0: STO_A Bit 1: STO_B	- - - -	UINT16 UINT16 R/- - -	CANopen 3008:26h Modbus 2124
_Iq_act_rms	Actual motor current (q component, generating torque) In increments of 0.01 A_{rms}.	A_{rms} - - -	INT16 INT16 R/- - -	CANopen 301E:1h Modbus 7682
_Iq_ref_rms	Reference motor current (q component, generating torque) In increments of 0.01 A_{rms}.	A_{rms} - - -	INT16 INT16 R/- - -	CANopen 301E:10h Modbus 7712
_LastError_Qual	Additional info of last error This parameter contains additional information on the last error, depending on the error number. For example: a parameter address.	- - 0 -	UINT16 UINT16 R/- - -	CANopen 301C:1Fh Modbus 7230

0198441113956, V1.00, 07.2013

Parameter name	Description	Unit Minimum value Factory setting Maximum value	Data type R/W Persistent Expert	Parameter address via field-bus
_LastError	Error causing a stop (error classes 1 to 4) (354) Number of the current error. Any consequtive errors do not overwrite this error number. Example: If a limit switch error reaction caused an overvoltage error, this parameter would contain the number of the limit switch error. Exception: Errors of error class 4 overwrite existing entries.	- - - -	UINT16 UINT16 R/- - -	CANopen 603F:0_h Modbus 7178
_LastWarning	Number of last warning (error class 0) (354) Number of the most recent warning. If the warning becomes inactive again, the number is memorized until the next fault reset. Value 0: No warning occurred	- - - -	UINT16 UINT16 R/- - -	CANopen 301C:9_h Modbus 7186
_M_BRK_T_apply	Holding brake application time	ms - - -	UINT16 UINT16 R/- - -	CANopen 300D:21_h Modbus 3394
_M_BRK_T_release	Holding brake release time	ms - - -	UINT16 UINT16 R/- - -	CANopen 300D:22_h Modbus 3396
_M_Encoder	Encoder type of motor **1 / SinCos With HiFa**: SinCos with Hiperface **2 / SinCos Without HiFa**: SinCos without Hiperface **3 / SinCos With Hall**: SinCos with Hall **4 / SinCos With EnDat**: SinCos with EnDat **5 / EnDat Without SinCos**: EnDat without SinCos **6 / Resolver**: Resolver **7 / Hall**: Hall (not supported yet) **8 / BISS**: BISS High byte: Value 0: Rotary encoder Value 1: Linear encoder	- - - -	UINT16 UINT16 R/- - -	CANopen 300D:3_h Modbus 3334
_M_HoldingBrake	Holding brake identification Value 0: Motor without holding brake Value 1: Motor with holding brake	- - - -	UINT16 UINT16 R/- - -	CANopen 300D:20_h Modbus 3392
_M_I_0	Continuous stall current of motor In increments of 0.01 A_{rms}.	A_{rms} - - -	UINT16 UINT16 R/- - -	CANopen 300D:13_h Modbus 3366

0198441113956, V1.00, 07.2013

Parameter name	Description	Unit Minimum value Factory setting Maximum value	Data type R/W Persistent Expert	Parameter address via field-bus
_M_I_max	Maximum current of motor In increments of 0.01 A_{rms}.	A_{rms} - - -	UINT16 UINT16 R/- - -	CANopen 300D:6_h Modbus 3340
_M_I_nom	Nominal current of motor In increments of 0.01 A_{rms}.	A_{rms} - - -	UINT16 UINT16 R/- - -	CANopen 300D:7_h Modbus 3342
_M_I2t	Maximum permissible time for maximum current of motor	ms - - -	UINT16 UINT16 R/- - -	CANopen 300D:11_h Modbus 3362
_M_Jrot	Moment of inertia of motor Units: Rotary motors: $kgcm^2$ Linear motors: kg In increments of 0.001 motor_f.	motor_f - - -	UINT32 UINT32 R/- - -	CANopen 300D:C_h Modbus 3352
_M_kE	Voltage constant kE of motor Voltage constant in Vrms at 1000 min^{-1}. Units: Rotary motors: $Vrms/min^{-1}$ Linear motors: Vrms/(m/s) In increments of 0.1 motor_u.	motor_u - - -	UINT32 UINT32 R/- - -	CANopen 300D:B_h Modbus 3350
_M_L_d	Inductance d component of motor In increments of 0.01 mH.	mH - - -	UINT16 UINT16 R/- - -	CANopen 300D:F_h Modbus 3358
_M_L_q	Inductance q component of motor In increments of 0.01 mH.	mH - - -	UINT16 UINT16 R/- - -	CANopen 300D:E_h Modbus 3356
_M_load	Current load of motor (327)	% - - -	INT16 INT16 R/- - -	CANopen 301C:$1A_h$ Modbus 7220
_M_M_0	Continuous stall torque of motor A value of 100 % in operating mode Profile Torque corresponds to this parameter. Units: Rotary motors: Ncm Linear motors: N	motor_m - - -	UINT16 UINT16 R/- - -	CANopen 300D:16_h Modbus 3372
_M_M_max	Maximum torque of motor In increments of 0.1 Nm.	Nm - - -	UINT16 UINT16 R/- - -	CANopen 300D:9_h Modbus 3346

0198441113956, V1.00, 07.2013

Parameter name	Description	Unit Minimum value Factory setting Maximum value	Data type R/W Persistent Expert	Parameter address via field-bus
_M_M_nom	Nominal torque/force of motor Units: Rotary motors: Ncm Linear motors: N	motor_m - - -	UINT16 UINT16 R/- - -	CANopen 300D:8h Modbus 3344
_M_maxoverload	Maximum value of overload of motor (328) Maximum overload of motor during the last 10 seconds.	% - - -	INT16 INT16 R/- - -	CANopen 301C:1Bh Modbus 7222
_M_n_max	Maximum permissible speed of rotation/ velocity of motor Units: Rotary motors: min^{-1} Linear motors: mm/s	motor_v - - -	UINT16 UINT16 R/- - -	CANopen 300D:4h Modbus 3336
_M_n_nom	Nominal speed of rotation/velocity of motor Units: Rotary motors: min^{-1} Linear motors: mm/s	motor_v - - -	UINT16 UINT16 R/- - -	CANopen 300D:5h Modbus 3338
_M_overload	Current overload of motor (I2t) (328)	% - - -	INT16 INT16 R/- - -	CANopen 301C:19h Modbus 7218
_M_Polepair	Number of pole pairs of motor	- - - -	UINT16 UINT16 R/- - -	CANopen 300D:14h Modbus 3368
_M_PolePairPitch	Pole pair pitch of motor In increments of 0.01 mm.	mm - - -	UINT16 UINT16 R/- - -	CANopen 300D:23h Modbus 3398
_M_R_UV	Winding resistance of motor In increments of 0.01 Ω.	Ω - - -	UINT16 UINT16 R/- - -	CANopen 300D:Dh Modbus 3354
_M_T_max	Maximum temperature of motor (326)	°C - - -	INT16 INT16 R/- - -	CANopen 300D:10h Modbus 3360
_M_Type	Motor type Value 0: No motor selected Value >0: Connected motor type	- - - -	UINT32 UINT32 R/- - -	CANopen 300D:2h Modbus 3332
_M_U_max	Maximum voltage of motor In increments of 0.1 V.	V - - -	UINT16 UINT16 R/- - -	CANopen 300D:19h Modbus 3378

0198441113956, V1.00, 07.2013

Parameter name	Description	Unit Minimum value Factory setting Maximum value	Data type R/W Persistent Expert	Parameter address via field-bus
_M_U_nom	Nominal voltage of motor In increments of 0.1 V.	V - - -	UINT16 UINT16 R/- - -	CANopen 300D:A_h Modbus 3348
_ModeError	Error code for synchronous errors (ME bit) Drive Profile Lexium: Manufacturer-specific error code that caused the ModeError bit to be set. Usually, this is an error that was caused by the activation of an operating mode. The ModeError bit relates to MT-dependent parameters.	- - - -	UINT16 UINT16 R/- - -	CANopen 301B:19_h Modbus 6962
_ModeErrorInfo	Additional error information of a ModeError (ME bit) Drive Profile Lexium: Indicates the parameter of the mapping that caused the ME bit to be set. The ME bit is set if MT-dependent parameters of the current mapping cause an error in connection with a write command. Example: 1 = First mapped parameter 2 = Second mapped parameter etc.	- - - -	UINT16 UINT16 R/- - -	CANopen 301B:$1C_h$ Modbus 6968
_n_act_ENC1	Actual speed of rotation of encoder 1	min^{-1} - - -	INT16 INT16 R/- - -	CANopen 301E:28_h Modbus 7760
_n_act	Actual speed of rotation	min^{-1} - - -	INT16 INT16 R/- - -	CANopen 301E:8_h Modbus 7696
_n_ref	Reference speed of rotation	min^{-1} - - -	INT16 INT16 R/- - -	CANopen 301E:7_h Modbus 7694
_OpHours	Operating hours counter	s - - -	UINT32 UINT32 R/- - -	CANopen 301C:A_h Modbus 7188
_p_absENC	Absolute position with reference to the encoder range (151) This value corresponds to the modulo position of the absolute encoder range. The value is no longer valid if the gear ratio of machine encoder and motor encoder is changed. A restart is required in such a case.	usr_p - - -	UINT32 UINT32 R/- - -	CANopen 301E:F_h Modbus 7710

0198441113956, V1.00, 07.2013

Parameter name	Description	Unit Minimum value Factory setting Maximum value	Data type R/W Persistent Expert	Parameter address via field-bus
_p_absmodulo	Absolute position with reference to internal resolution in internal units This value is based on encoder raw position with reference to internal resolution (131072 Inc).	Inc - - -	UINT32 UINT32 R/- - -	CANopen 301E:E_h Modbus 7708
_p_act_ENC1_int	Actual position of encoder 1 in internal units	Inc - - -	INT32 INT32 R/- - -	CANopen 301E:26_h Modbus 7756
_p_act_ENC1	Actual position of encoder 1	usr_p - - -	INT32 INT32 R/- - -	CANopen 301E:27_h Modbus 7758
_p_act_int	Actual position in internal units	Inc - - -	INT32 INT32 R/- - -	CANopen 6063:0_h Modbus 7700
_p_act	Actual position	usr_p - - -	INT32 INT32 R/- - -	CANopen 6064:0_h Modbus 7706
_p_dif_load_peak_usr	Maximum value of the load-dependent position deviation (306) This parameter contains the maximum load-dependent position deviation reached so far. A write access resets this value. Changed settings become active immediately.	usr_p 0 - 2147483647	INT32 INT32 R/W - -	CANopen 301E:15_h Modbus 7722
_p_dif_load_peak	Maximum value of the load-dependent position deviation (306) This parameter contains the maximum load-dependent position deviation reached so far. A write access resets this value. The parameter _p_dif_load_peak_usr allows you to enter the value in user-defined units.. In increments of 0.0001 revolution. Changed settings become active immediately.	revolution 0.0000 - 429496.7295	UINT32 UINT32 R/W - -	CANopen 301E:$1B_h$ Modbus 7734
_p_dif_load_usr	Current load-dependent position deviation between reference and actual position (305) The load-dependent position deviation is the difference between the reference position and the actual position caused by the load. This value is used for following error monitoring.	usr_p -2147483648 - 2147483647	INT32 INT32 R/- - -	CANopen 301E:16_h Modbus 7724

0198441113956, V1.00, 07.2013

Parameter name	Description	Unit Minimum value Factory setting Maximum value	Data type R/W Persistent Expert	Parameter address via field-bus
_p_dif_load	Current load-dependent position deviation between reference and actual position (305) The load-dependent position deviation is the difference between the reference position and the actual position caused by the load. This value is used for following error monitoring. The parameter _p_dif_load_usr allows you to enter the value in user-defined units. In increments of 0.0001 revolution.	revolution -214748.3648 - 214748.3647	INT32 INT32 R/- - -	CANopen 301E:1C$_h$ Modbus 7736
_p_dif_usr	Current position deviation including dynamic position deviation Position deviation is the difference between reference position and actual position. The current position deviation consists of the load-dependent position deviation and the dynamic position deviation.	usr_p -2147483648 - 2147483647	INT32 INT32 R/- - -	CANopen 301E:14$_h$ Modbus 7720
_p_dif	Current position deviation including dynamic position deviation Position deviation is the difference between reference position and actual position. The current position deviation consists of the load-dependent position deviation and the dynamic position deviation. The parameter _p_dif_usr allows you to enter the value in user-defined units. In increments of 0.0001 revolution.	revolution -214748.3648 - 214748.3647	INT32 INT32 R/- - -	CANopen 60F4:0$_h$ Modbus 7716
_p_ref_int	Reference position in internal units Value corresponds to the reference position of the position controller.	Inc - - -	INT32 INT32 R/- - -	CANopen 301E:9$_h$ Modbus 7698
_p_ref	Reference position Value corresponds to the reference position of the position controller.	usr_p - - -	INT32 INT32 R/- - -	CANopen 301E:C$_h$ Modbus 7704
_PAR_ScalingError	Additional information on error during recalculation Coding: Bits 0 ... 15: Address of the parameter that caused the error Bits 16 ... 31: Reserved Changed settings become active immediately.	- - - -	UINT32 UINT32 R/- - -	CANopen 3004:16$_h$ Modbus 1068

0198441113956, V1.00, 07.2013

Parameter name	Description	Unit Minimum value Factory setting Maximum value	Data type R/W Persistent Expert	Parameter address via field-bus
_PAR_ScalingState	Status of recalculation of the parameters with user-defined units **0 / Recalculation active**: Recalculation active **1 / reserved (1)**: reserved (1) **2 / Recalculation finished - no error**: Recalculation finished, no error **3 / Error during recalculation**: Error during recalculation **4 / Initialization successful**: Initialization successful **5 / reserved (5)**: reserved (5) **6 / reserved (6)**: reserved (6) **7 / reserved (7)**: reserved (7) Status of recalculation of the parameters with user-defined units which are recalculated with a changed scaling factor. Changed settings become active immediately.	- 0 2 7	UINT16 UINT16 R/- - -	CANopen 3004:15$_h$ Modbus 1066
_PosRegStatus	Status of the position register channels (313) Signal state: 0: Comparison criterion not met 1: Comparison criterion met Bit assignments: Bit 0: State of position register channel 1 Bit 1: State of position register channel 2 Bit 2: State of position register channel 3 Bit 3: State of position register channel 4	- - - -	UINT16 UINT16 R/- - -	CANopen 300B:1$_h$ Modbus 2818
_Power_act	Current output power	W - - -	INT32 INT32 R/- - -	CANopen 301C:D$_h$ Modbus 7194
_Power_mean	Mean output power	W - - -	UINT16 UINT16 R/- - -	CANopen 301C:E$_h$ Modbus 7196
_pref_acc	Acceleration of reference value for acceleration feed-forward control Sign according to the changed speed value: Increased speed: Positive sign Reduced speed: Negative sign	usr_a - - -	INT32 INT32 R/- - -	CANopen 301F:9$_h$ Modbus 7954
_pref_v	Velocity of reference value for velocity feed-forward control	usr_v - - -	INT32 INT32 R/- - -	CANopen 301F:7$_h$ Modbus 7950
_prgNoDEV	Firmware number of device Example: PR0912.00 The value is provided as a decimal value: 91200	- - - -	UINT32 UINT32 R/- - -	CANopen 3001:1$_h$ Modbus 258

0198441113956, V1.00, 07.2013

Parameter name	Description	Unit Minimum value Factory setting Maximum value	Data type R/W Persistent Expert	Parameter address via field-bus
_prgNoLOD	Firmware number of update loader Example: PR0912.00 The value is provided as a decimal value: 91200	- - - -	UINT32 UINT32 R/- - -	CANopen 3001:33h Modbus 358
_prgRevDEV	Firmware revision of device The version format is XX.YY.ZZ. Part XX.YY is contained in parameter _prgVerDEV. Part ZZ is used for quality evolution and contained in this parameter. Example: V01.23.45 The value is provided as a decimal value: 45	- - - -	UINT16 UINT16 R/- - -	CANopen 3001:4h Modbus 264
_prgRevLOD	Firmware revision of update loader The version format is XX.YY.ZZ. Part XX.YY is contained in parameter _prgVerLOD. Part ZZ is used for quality evolution and contained in this parameter. Example: V01.23.45 The value is provided as a decimal value: 45	- - - -	UINT16 UINT16 R/- - -	CANopen 3001:36h Modbus 364
_prgVerDEV	Firmware version of device The version format is XX.YY.ZZ. Part XX.YY is contained in this parameter. Part ZZ is contained in parameter _prgRev-DEV. Example: V01.23.45 The value is provided as a decimal value: 123	- - - -	UINT16 UINT16 R/- - -	CANopen 3001:2h Modbus 260
_prgVerLOD	Firmware version of update loader The version format is XX.YY.ZZ. Part XX.YY is contained in this parameter. Part ZZ is contained in parameter _prgRev-LOD. Example: V01.23.45 The value is provided as a decimal value: 123	- - - -	UINT16 UINT16 R/- - -	CANopen 3001:34h Modbus 360
_PS_I_max	Maximum current of power stage In increments of 0.01 A_{rms}.	A_{rms} - - -	UINT16 UINT16 R/- per. -	CANopen 3010:2h Modbus 4100
_PS_I_nom	Nominal current of power stage In increments of 0.01 A_{rms}.	A_{rms} - - -	UINT16 UINT16 R/- per. -	CANopen 3010:1h Modbus 4098

0198441113956, V1.00, 07.2013

Parameter name	Description	Unit Minimum value Factory setting Maximum value	Data type R/W Persistent Expert	Parameter address via field-bus
_PS_load	Current load of power stage (327)	% - - -	INT16 INT16 R/- - -	CANopen 301C:17h Modbus 7214
_PS_maxoverload	Maximum value of overload of power stage (328) Maximum overload of power stage during the last 10 seconds.	% - - -	INT16 INT16 R/- - -	CANopen 301C:18h Modbus 7216
_PS_overload_cte	Current overload of power stage (chip temperature)	% - - -	INT16 INT16 R/- - -	CANopen 301C:22h Modbus 7236
_PS_overload_I2t	Current overload of power stage (I2t)	% - - -	INT16 INT16 R/- - -	CANopen 301C:16h Modbus 7212
_PS_overload_psq	Current overload of power stage (power squared)	% - - -	INT16 INT16 R/- - -	CANopen 301C:23h Modbus 7238
_PS_overload	Current overload of power stage (328)	% - - -	INT16 INT16 R/- - -	CANopen 301C:24h Modbus 7240
_PS_T_current	Current power stage temperature (326)	°C - - -	INT16 INT16 R/- - -	CANopen 301C:10h Modbus 7200
_PS_T_max	Maximum power stage temperature (326)	°C - - -	INT16 INT16 R/- per. -	CANopen 3010:7h Modbus 4110
_PS_T_warn	Temperature warning threshold of power stage (326)	°C - - -	INT16 INT16 R/- per. -	CANopen 3010:6h Modbus 4108
_PS_U_maxDC	Maximum permissible DC bus voltage In increments of 0.1 V.	V - - -	UINT16 UINT16 R/- per. -	CANopen 3010:3h Modbus 4102
_PS_U_minDC	Minimum permissible DC bus voltage In increments of 0.1 V.	V - - -	UINT16 UINT16 R/- per. -	CANopen 3010:4h Modbus 4104

0198441113956, V1.00, 07.2013

Parameter name	Description	Unit Minimum value Factory setting Maximum value	Data type R/W Persistent Expert	Parameter address via field-bus
_PS_U_minStopDC	DC bus voltage low threshold for Quick Stop If the threshold is reached, the drive performs a Quick Stop. In increments of 0.1 V.	V - - -	UINT16 UINT16 R/- per. -	CANopen 3010:A_h Modbus 4116
_PT_max_val	Maximum possible value for operating mode Profile Torque 100.0 % correspond to the continuous stall torque _M_M_0. In increments of 0.1 %.	% - - -	INT16 INT16 R/- - -	CANopen 301C:1E_h Modbus 7228
_RAMP_p_act	Actual position of profile generator	usr_p - - -	INT32 INT32 R/- - -	CANopen 301F:2_h Modbus 7940
_RAMP_p_target	Target position of profile generator Absolute position value of the profile generator, calculated on the basis of the relative and absolute position values received.	usr_p - - -	INT32 INT32 R/- - -	CANopen 301F:1_h Modbus 7938
_RAMP_v_act	Actual velocity of profile generator	usr_v - - -	INT32 INT32 R/- - -	CANopen 606B:0_h Modbus 7948
_RAMP_v_target	Target velocity of profile generator	usr_v - - -	INT32 INT32 R/- - -	CANopen 301F:5_h Modbus 7946
_RES_load	Current load of braking resistor (327) The braking resistor set via parameter RESint_ext is monitored.	% - - -	INT16 INT16 R/- - -	CANopen 301C:14_h Modbus 7208
_RES_maxoverload	Maximum value of overload of braking resistor (328) Maximum overload of braking resistor during the last 10 seconds. The braking resistor set via parameter RESint_ext is monitored.	% - - -	INT16 INT16 R/- - -	CANopen 301C:15_h Modbus 7210
_RES_overload	Current overload of braking resistor (I2t) (328) The braking resistor set via parameter RESint_ext is monitored.	% - - -	INT16 INT16 R/- - -	CANopen 301C:13_h Modbus 7206
_RESint_P	Nominal power of internal braking resistor	W - - -	UINT16 UINT16 R/- per. -	CANopen 3010:9_h Modbus 4114

0198441113956, V1.00, 07.2013

Parameter name	Description	Unit Minimum value Factory setting Maximum value	Data type R/W Persistent Expert	Parameter address via field-bus
_RESint_R	Resistance value of internal braking resistor In increments of 0.01 Ω.	Ω - - -	UINT16 UINT16 R/- per. -	CANopen 3010:8_h Modbus 4112
_RMAC_Status	Status of relative movement after capture (298) **0 / Not Active**: Not active **1 / Active Or Finished**: Relative movement after capture is active or finished	- 0 - 1	UINT16 UINT16 R/- - -	CANopen 3023:11_h Modbus 8994
_ScalePOSmax	Maximum user-defined value for positions This value depends on ScalePOSdenom and ScalePOSnum.	usr_p - - -	INT32 INT32 R/- - -	CANopen 301F:A_h Modbus 7956
_ScaleRAMPmax	Maximum user-defined value for accelerations and decelerations This value depends on ScaleRAMPdenom and ScaleRAMPnum.	usr_a - - -	INT32 INT32 R/- - -	CANopen 301F:C_h Modbus 7960
_ScaleVELmax	Maximum user-defined value for velocities This value depends on ScaleVELdenom and ScaleVELnum.	usr_v - - -	INT32 INT32 R/- - -	CANopen 301F:B_h Modbus 7958
_SigActive	Current status of monitoring signals See _SigLatched for more details on the bit codes.	- - - -	UINT32 UINT32 R/- - -	CANopen 301C:7_h Modbus 7182

0198441113956, V1.00, 07.2013

Parameter name	Description	Unit Minimum value Factory setting Maximum value	Data type R/W Persistent Expert	Parameter address via field-bus
_SigLatched	Saved status of monitoring signals (349) Signal state: 0: Not activated 1: Activated Bit assignments: Bit 0: General error Bit 1: Hardware limit switches (LIMP/LIMN/REF) Bit 2: Out of range (software limit switches, tuning) Bit 3: Quick Stop via fieldbus Bit 4: Error in active operating mode Bit 5: Commissioning interface (RS485) Bit 6: Integrated fieldbus Bit 7: Reserved Bit 8: Following error Bit 9: Reserved Bit 10: Inputs STO are 0 Bit 11: Inputs STO different Bit 12: Reserved Bit 13: DC bus voltage low Bit 14: DC bus voltage high Bit 15: Mains phase missing Bit 16: Integrated encoder interface Bit 17: Overtemperature motor Bit 18: Overtemperature power stage Bit 19: Reserved Bit 20: Memory card Bit 21: Optional fieldbus module Bit 22: Optional encoder module Bit 23: Optional safety module eSM or module IOM1 Bit 24: Reserved Bit 25: Reserved Bit 26: Motor connection Bit 27: Motor overcurrent/short circuit Bit 28: Frequency of reference signal too high Bit 29: EEPROM error Bit 30: System start-up (hardware or parameter) Bit 31: System error (for example, watchdog, internal hardware interface) Monitoring functions are product-dependent.	- - - -	UINT32 UINT32 R/- - -	CANopen 301C:8h Modbus 7184
_SuppDriveModes	Supported operating modes as per DSP402 Bit 0: Profile Position Bit 2: Profile Velocity Bit 3: Profile Torque Bit 5: Homing Bit 16: Jog Bit 21: Manual Tuning	- - - -	UINT32 UINT32 R/- - -	CANopen 6502:0h Modbus 6952

0198441113956, V1.00, 07.2013

Parameter name	Description	Unit Minimum value Factory setting Maximum value	Data type R/W Persistent Expert	Parameter address via field-bus
_tq_act	Actual torque value Positive value: Actual torque in positive direction of movement Negative value: Actual torque in negative direction of movement 100.0 % correspond to the continuous stall torque _M_M_0. In increments of 0.1 %.	% - - -	INT16 INT16 R/- - -	CANopen 6077:0_h Modbus 7752
_Ud_ref	Reference motor voltage d component In increments of 0.1 V.	V - - -	INT16 INT16 R/- - -	CANopen 301E:5_h Modbus 7690
_UDC_act	Voltage at DC bus In increments of 0.1 V.	V - - -	UINT16 UINT16 R/- - -	CANopen 301C:F_h Modbus 7198
_Udq_ref	Total motor voltage (vector sum d components and q components) Square root of ($_Uq_ref^2 + _Ud_ref^2$) In increments of 0.1 V.	V - - -	INT16 INT16 R/- - -	CANopen 301E:6_h Modbus 7692
_Uq_ref	Reference motor voltage q component In increments of 0.1 V.	V - - -	INT16 INT16 R/- - -	CANopen 301E:4_h Modbus 7688
_v_act_ENC1	Actual velocity of encoder 1	usr_v - - -	INT32 INT32 R/- - -	CANopen 301E:29_h Modbus 7762
_v_act	Actual velocity	usr_v - - -	INT32 INT32 R/- - -	CANopen 606C:0_h Modbus 7744
_v_ref	Reference velocity	usr_v - - -	INT32 INT32 R/- - -	CANopen 301E:$1F_h$ Modbus 7742
_Vmax_act	Currently effective velocity limitation Value of the currently effective velocity limitation. This is one of the following values (whichever is lowest): - CTRL_v_max - M_n_max (only if motor is connected) - Velocity limitation via digital input	usr_v - - -	UINT32 UINT32 R/- - -	CANopen 301C:29_h Modbus 7250
_VoltUtil	Degree of utilization of DC bus voltage With a value of 100%, the drive operates at the voltage limit.	% - - -	INT16 INT16 R/- - -	CANopen 301E:13_h Modbus 7718

0198441113956, V1.00, 07.2013

Parameter name	Description	Unit Minimum value Factory setting Maximum value	Data type R/W Persistent Expert	Parameter address via field-bus
_WarnActive	Active warnings, bit-coded See _WarnLatched for more details on the bit codes.	- - - -	UINT32 UINT32 R/- - -	CANopen 301C:B_h Modbus 7190
_WarnLatched	Saved warnings, bit-coded (348) Saved warning bits are deleted in the case of a Fault Reset. Bits 10, 13 are deleted automatically. Signal state: 0: Not activated 1: Activated Bit assignments: Bit 0: General warning Bit 1: Reserved Bit 2: Out of range (SW limit switches, tuning) Bit 3: Reserved Bit 4: Active operating mode Bit 5: Commissioning interface (RS485) Bit 6: Integrated fieldbus Bit 7: Reserved Bit 8: Following warning limit reached Bit 9: Reserved Bit 10: Inputs STO_A and/or STO_B Bit 11: Reserved Bit 12: Reserved Bit 13: Low voltage DC bus or mains phase missing Bit 14: Reserved Bit 15: Reserved Bit 16: Integrated encoder interface Bit 17: Temperature of motor high Bit 18: Temperature of power stage high Bit 19: Reserved Bit 20: Memory card Bit 21: Optional fieldbus module Bit 22: Optional encoder module Bit 23: Optional safety module eSM or module IOM1 Bit 24: Reserved Bit 25: Reserved Bit 26: Reserved Bit 27: Reserved Bit 28: Reserved Bit 29: Braking resistor overload (I^2t) Bit 30: Power stage overload (I^2t) Bit 31: Motor overload (I^2t) Monitoring functions are product-dependent.	- - - -	UINT32 UINT32 R/- - -	CANopen 301C:C_h Modbus 7192

0198441113956, V1.00, 07.2013

Parameter name	Description	Unit Minimum value Factory setting Maximum value	Data type R/W Persistent Expert	Parameter address via field-bus
AbsHomeRequest	Absolute positioning only after homing **0 / No**: No **1 / Yes**: Yes This parameter has no function if the parameter 'PP_ModeRangeLim' is set to '1' which allows overtraveling of the movement range (ref_ok is set to 0 when the range is overtraveled). Changed settings become active immediately.	- 0 1 1	UINT16 UINT16 R/W per. -	CANopen 3006:16_h Modbus 1580
AccessLock	Locking other access channels (185) Value 0: Allow control via other access channels Value 1: Lock control via other access channels Example: The access channel is used by the fieldbus. In this case, control via the commissioning software or the HMI is not possible. The access channel can only be locked after the current operating mode has terminated. Changed settings become active immediately.	- 0 0 1	UINT16 UINT16 R/W - -	CANopen 3001:E_h Modbus 284
AT_dir	Direction of movement for Autotuning (159) **1 / Positive Negative Home**: Positive direction first, then negative direction with return to initial position **2 / Negative Positive Home**: Negative direction first, then positive direction with return to initial position **3 / Positive Home**: Positive direction only with return to initial position **4 / Positive**: Positive direction only without return to initial position **5 / Negative Home**: Negative direction only with return to initial position **6 / Negative**: Negative direction only without return to initial position Changed settings become active the next time the motor moves.	- 1 1 6	UINT16 UINT16 R/W - -	CANopen 302F:4_h Modbus 12040

0198441113956, V1.00, 07.2013

Parameter name	Description	Unit Minimum value Factory setting Maximum value	Data type R/W Persistent Expert	Parameter address via field-bus
AT_dis_usr	Movement range for Autotuning (159) Range within which the control parameters are automatically optimized. The range is entered with reference to the current position. NOTE: In the case of "Movement in one direction only" (Parameter AT_dir), the specified range is used for each optimization step. The actual movement typically corresponds to 20 times the value, but it is not limited. The minimum value, the factory setting and the maximum value depend on the scaling factor. Changed settings become active the next time the motor moves.	usr_p 1 32768 2147483647	INT32 INT32 R/W - -	CANopen 302F:12$_h$ Modbus 12068
AT_dis	Movement range for Autotuning (159) Range within which the control parameters are automatically optimized. The range is entered with reference to the current position. NOTE: In the case of "Movement in one direction only" (Parameter AT_dir), the specified range is used for each optimization step. The actual movement typically corresponds to 20 times the value, but it is not limited. The parameter AT_dis_usr allows you to enter the value in user-defined units. In increments of 0.1 revolution. Changed settings become active the next time the motor moves.	revolution 1.0 2.0 999.9	UINT32 UINT32 R/W - -	CANopen 302F:3$_h$ Modbus 12038
AT_mechanical	Type of coupling of the system (160) **1 / Direct Coupling**: Direct coupling **2 / Belt Axis**: Belt axis **3 / Spindle Axis**: Spindle axis Changed settings become active the next time the motor moves.	- 1 2 3	UINT16 UINT16 R/W - -	CANopen 302F:E$_h$ Modbus 12060
AT_n_ref	Jump of speed of rotation for Autotuning The parameter AT_v_ref allows you to enter the value in user-defined units. Changed settings become active the next time the motor moves.	min^{-1} 10 100 1000	UINT32 UINT32 R/W - -	CANopen 302F:6$_h$ Modbus 12044
AT_start	Autotuning start (160) Value 0: Terminate Value 1: Activate EasyTuning Value 2: Activate ComfortTuning Changed settings become active immediately.	- 0 - 2	UINT16 UINT16 R/W - -	CANopen 302F:1$_h$ Modbus 12034

0198441113956, V1.00, 07.2013

Parameter name	Description	Unit Minimum value Factory setting Maximum value	Data type R/W Persistent Expert	Parameter address via field-bus
AT_v_ref	Jump of velocity for Autotuning The minimum value, the factory setting and the maximum value depend on the scaling factor. Changed settings become active the next time the motor moves.	usr_v 1 100 2147483647	INT32 INT32 R/W - -	CANopen 302F:13$_h$ Modbus 12070
AT_wait	Waiting time between Autotuning steps (163) Changed settings become active the next time the motor moves.	ms 300 500 10000	UINT16 UINT16 R/W - -	CANopen 302F:9$_h$ Modbus 12050
BLSH_Mode	Processing mode of backlash compensation (263) **0 / Off**: Backlash compensation is off **1 / OnAfterPositiveMovement**: Backlash compensation is on, last movement was in positive direction **2 / OnAfterNegativeMovement**: Backlash compensation is on, last movement was in negative direction Changed settings become active immediately.	- 0 0 2	UINT16 UINT16 R/W per. -	CANopen 3006:41$_h$ Modbus 1666
BLSH_Position	Position value for backlash compensation (262) Setting can only be changed if power stage is disabled. Changed settings become active the next time the power stage is enabled.	usr_p 0 0 2147483647	INT32 INT32 R/W per. -	CANopen 3006:42$_h$ Modbus 1668
BLSH_Time	Processing time for backlash compensation (263) Value 0: Immediate backlash compensation Value >0: Processing time for backlash compensation Setting can only be changed if power stage is disabled. Changed settings become active the next time the power stage is enabled.	ms 0 0 16383	UINT16 UINT16 R/W per. -	CANopen 3006:44$_h$ Modbus 1672
BRK_AddT_apply	Additional time delay for applying the holding brake The overall time delay for applying the holding brake is the time delay from the electronic nameplate of the motor and the additional time delay in this parameter. Setting can only be changed if power stage is disabled. Changed settings become active the next time the power stage is enabled.	ms 0 0 1000	INT16 INT16 R/W per. -	CANopen 3005:8$_h$ Modbus 1296

0198441113956, V1.00, 07.2013

Parameter name	Description	Unit Minimum value Factory setting Maximum value	Data type R/W Persistent Expert	Parameter address via field-bus
BRK_AddT_release	Additional time delay for releasing the holding brake The overall time delay for releasing the holding brake is the time delay from the electronic nameplate of the motor and the additional time delay in this parameter. Setting can only be changed if power stage is disabled. Changed settings become active the next time the power stage is enabled.	ms 0 0 400	INT16 INT16 R/W per. -	CANopen 3005:7h Modbus 1294
BRK_release	Processing of holding brake (148) **0 / Automatic**: Automatic processing **1 / Manual Release**: Manual release of holding brake The holding brake output can only be activated in the operating states 'Switch On Disabled', 'Ready To Switch On' or 'Fault'. If the power stage is active, the value is automatically set to 0. Changed settings become active immediately.	- 0 0 1	UINT16 UINT16 R/W - -	CANopen 3008:Ah Modbus 2068
Cap1Activate	Capture input 1 start/stop (296) **0 / Capture Stop**: Cancel capture function **1 / Capture Once**: Start one-time capture **2 / Capture Continuous**: Start continuous capture In the case of one-time capture, the function is terminated when the first value is captured. In the case of continuous capture, the function continues to run. Changed settings become active immediately.	- 0 - 2	UINT16 UINT16 R/W - -	CANopen 300A:4h Modbus 2568
Cap1Config	Capture input 1 configuration (296) **0 / Falling Edge**: Position capture at falling edge **1 / Rising Edge**: Position capture at rising edge Changed settings become active immediately.	- 0 0 1	UINT16 UINT16 R/W - -	CANopen 300A:2h Modbus 2564
Cap1Source	Capture input 1 encoder source **0 / Pact Encoder 1**: Source for capture input 1 is Pact of encoder 1 Changed settings become active immediately.	- 0 0 0	UINT16 UINT16 R/W - -	CANopen 300A:Ah Modbus 2580

0198441113956, V1.00, 07.2013

Parameter name	Description	Unit Minimum value Factory setting Maximum value	Data type R/W Persistent Expert	Parameter address via field-bus
Cap2Activate	Capture input 2 start/stop (296) **0 / Capture Stop**: Cancel capture function **1 / Capture Once**: Start one-time capture **2 / Capture Continuous**: Start continuous capture In the case of one-time capture, the function is terminated when the first value is captured. In the case of continuous capture, the function continues to run. Changed settings become active immediately.	- 0 - 2	UINT16 UINT16 R/W - -	CANopen 300A:5h Modbus 2570
Cap2Config	Capture input 2 configuration **0 / Falling Edge**: Position capture at falling edge **1 / Rising Edge**: Position capture at rising edge **2 / Both Edges**: Position capture at both edges Changed settings become active immediately.	- 0 0 1	UINT16 UINT16 R/W - -	CANopen 300A:3h Modbus 2566
Cap2Source	Capture input 2 encoder source **0 / Pact Encoder 1**: Source for capture input 2 is Pact of encoder 1 Changed settings become active immediately.	- 0 0 0	UINT16 UINT16 R/W - -	CANopen 300A:Bh Modbus 2582
CLSET_p_DiffWin_usr	Position deviation for parameter set switching (274) If the position deviation of the position controller is less than the value of this parameter, the controller parameter set 2 is used. Otherwise, controller parameter set 1 is used. The minimum value, the factory setting and the maximum value depend on the scaling factor. Changed settings become active immediately.	usr_p 0 164 2147483647	INT32 INT32 R/W per. -	CANopen 3011:25h Modbus 4426
CLSET_p_DiffWin	Position deviation for parameter set switching (275) If the position deviation of the position controller is less than the value of this parameter, the controller parameter set 2 is used. Otherwise, controller parameter set 1 is used. The parameter CLSET_p_DiffWin_usr allows you to enter the value in user-defined units. In increments of 0.0001 revolution. Changed settings become active immediately.	revolution 0.0000 0.0100 2.0000	UINT16 UINT16 R/W per. -	CANopen 3011:1Ch Modbus 4408

0198441113956, V1.00, 07.2013

Parameter name	Description	Unit Minimum value Factory setting Maximum value	Data type R/W Persistent Expert	Parameter address via field-bus
CLSET_ParSwiCond	Condition for parameter set switching (274) **0 / None Or Digital Input**: None or digital input function selected **1 / Inside Position Deviation**: Inside position deviation (value definition in parameter CLSET_p_DiffWin) **2 / Below Reference Velocity**: Below reference velocity (value definition in parameter CLSET_v_Threshol) **3 / Below Actual Velocity**: Below actual velocity (value definition in parameter CLSET_v_Threshol) **4 / Reserved**: Reserved In the case of parameter set switching, the values of the following parameters are changed gradually: - CTRL_KPn - CTRL_TNn - CTRL_KPp - CTRL_TAUnref - CTRL_TAUiref - CTRL_KFPp The following parameters are changed immediately after the time for parameter set switching (CTRL_ParChgTime): - CTRL_Nf1damp - CTRL_Nf1freq - CTRL_Nf1bandw - CTRL_Nf2damp - CTRL_Nf2freq - CTRL_Nf2bandw - CTRL_Osupdamp - CTRL_Osupdelay - CTRL_Kfric Changed settings become active immediately.	- 0 0 4	UINT16 UINT16 R/W per. -	CANopen 3011:1A$_h$ Modbus 4404
CLSET_v_Threshol	Velocity threshold for parameter set switching (275) If the reference velocity or the actual velocity are less than the value of this parameter, the controller parameter set 2 is used. Otherwise, controller parameter set 1 is used. Changed settings become active immediately.	usr_v 0 50 2147483647	UINT32 UINT32 R/W per. -	CANopen 3011:1D$_h$ Modbus 4410
CLSET_winTime	Time window for parameter set switching (275) Value 0: Window monitoring deactivated. Value >0: Window time for the parameters CLSET_v_Threshol and CLSET_p_DiffWin. Changed settings become active immediately.	ms 0 0 1000	UINT16 UINT16 R/W per. -	CANopen 3011:1B$_h$ Modbus 4406

0198441113956, V1.00, 07.2013

Parameter name	Description	Unit Minimum value Factory setting Maximum value	Data type R/W Persistent Expert	Parameter address via field-bus
CTRL_GlobGain	Global gain factor (affects parameter set 1) (162) The global gain factor affects the following parameters of controller parameter set 1: - CTRL_KPn - CTRL_TNn - CTRL_KPp - CTRL_TAUnref The global gain factor is set to 100% - if the controller parameters are set to default - at the end of the Autotuning process - if the controller parameter set 2 is copied to set 1 via the parameter CTRL_ParSet-Copy NOTE: If a full configuration is transmitted via the fieldbus, the value for CTRL_Glob-Gain must be transmitted prior to the values of the controller parameters CTRL_KPn, CTRL_TNn, CTRL_KPp and CTRL_TAUn-ref. If CTRL_GlobGain is changed during a configuration transmission, CTRL_KPn, CTRL_TNn, CTRL_KPp and CTRL_TAUn-ref must also be part of the configuration. In increments of 0.1 %. Changed settings become active immedi-ately.	% 5.0 100.0 1000.0	UINT16 UINT16 R/W per. -	CANopen 3011:15$_h$ Modbus 4394
CTRL_I_max_fw	Maximum current for field weakening (d component) This value is only limited by the minimum/ maximum parameter range (no limitation of this value by motor/power stage). The actual field weakening current is the minimum of CTRL_I_max_fw and one half of the lower value of the nominal current of the power stage and the motor. In increments of 0.01 A_{rms}. Setting can only be changed if power stage is disabled. Changed settings become active the next time the power stage is enabled.	A_{rms} 0.00 0.00 300.00	UINT16 UINT16 R/W per. expert	CANopen 3011:F$_h$ Modbus 4382

0198441113956, V1.00, 07.2013

Parameter name	Description	Unit Minimum value Factory setting Maximum value	Data type R/W Persistent Expert	Parameter address via field-bus
CTRL_I_max	Current limitation (142) During operation, the actual current limit is one of the following values (whichever is lowest): - CTRL_I_max - M_I_max - PA_I_max - Current limitation via digital input Limitations caused by I2t monitoring are also taken into account. Default: PA_I_max at 8 kHz PWM frequency and 230/480 V mains voltage In increments of 0.01 A_{rms}. Changed settings become active immediately.	A_{rms} 0.00 - 463.00	UINT16 UINT16 R/W per. -	CANopen 3011:C_h Modbus 4376
CTRL_KFAcc	Acceleration feed-forward control In increments of 0.1 %. Changed settings become active immediately.	% 0.0 0.0 3000.0	UINT16 UINT16 R/W per. expert	CANopen 3011:A_h Modbus 4372
CTRL_ParChgTime	Period of time for parameter switching (165) In the case of parameter set switching, the values of the following parameters are changed gradually: - CTRL_KPn - CTRL_TNn - CTRL_KPp - CTRL_TAUnref - CTRL_TAUiref - CTRL_KFPp Such a parameter switching can be caused by - change of the active controller parameter set - change of the global gain - change of any of the parameters listed above - switching off the integral term of the velocity controller Changed settings become active immediately.	ms 0 0 2000	UINT16 UINT16 R/W per. -	CANopen 3011:14_h Modbus 4392
CTRL_ParSetCopy	Controller parameter set copying (276) Value 1: Copy controller parameter set 1 to set 2 Value 2: Copy controller parameter set 2 to set 1 If parameter set 2 copied to parameter set 1, the parameter CTRL_GlobGain is set to 100%. Changed settings become active immediately.	- 0.0 - 0.2	UINT16 UINT16 R/W - -	CANopen 3011:16_h Modbus 4396

0198441113956, V1.00, 07.2013

Parameter name	Description	Unit Minimum value Factory setting Maximum value	Data type R/W Persistent Expert	Parameter address via field-bus
CTRL_PwrUpParSet	Selection of controller parameter set at power up (271) **0 / Switching Condition**: The switching condition is used for parameter set switching **1 / Parameter Set 1**: Parameter set 1 is used **2 / Parameter Set 2**: Parameter set 2 is used The selected value is also written to CTRL_ParSetSel (non-persistent). Changed settings become active immediately.	- 0 1 2	UINT16 UINT16 R/W per. -	CANopen 3011:18h Modbus 4400
CTRL_SelParSet	Selection of controller parameter set (non-persistent) (165) Coding see parameter: CTRL_PwrUpParSet Changed settings become active immediately.	- 0 1 2	UINT16 UINT16 R/W - -	CANopen 3011:19h Modbus 4402
CTRL_SpdFric	Speed of rotation up to which the friction compensation is linear Changed settings become active immediately.	min^{-1} 0 5 20	UINT32 UINT32 R/W per. expert	CANopen 3011:9h Modbus 4370
CTRL_TAUnact	Filter time constant to smooth velocity of motor The default value is calculated on the basis of the motor data. In increments of 0.01 ms. Changed settings become active immediately.	ms 0.00 - 30.00	UINT16 UINT16 R/W per. expert	CANopen 3011:8h Modbus 4368
CTRL_v_max	Velocity limitation (136) During operation, the actual velocity limit is one of the following values (whichever is lowest): - CTRL_v_max - M_n_max - Velocity limitation via digital input Changed settings become active immediately.	usr_v 1 13200 2147483647	UINT32 UINT32 R/W per. -	CANopen 3011:10h Modbus 4384

0198441113956, V1.00, 07.2013

Parameter name	Description	Unit Minimum value Factory setting Maximum value	Data type R/W Persistent Expert	Parameter address via field-bus
CTRL_VelObsAct iv	Activation of velocity observer **0 / Velocity Observer Off**: Velocity observer is off **1 / Velocity Observer Passive**: Velocity observer is on, but not used for motor control **2 / Velocity Observer Active**: Velocity observer is on and used for motor control Velocity observer control reduces velocity ripple and enhances controller bandwith. NOTE: Set the correct dynamics and inertia values before activation. Setting can only be changed if power stage is disabled. Changed settings become active immediately.	- 0 0 2	UINT16 UINT16 R/W per. expert	CANopen 3011:22$_h$ Modbus 4420
CTRL_VelObsDyn	Dynamics of velocity observer Dynamics of the velocity observer. This time constant should be much smaller than that of the velocity controller. In increments of 0.01 ms. Setting can only be changed if power stage is disabled. Changed settings become active immediately.	ms 0.03 0.25 200.00	UINT16 UINT16 R/W per. expert	CANopen 3011:23$_h$ Modbus 4422
CTRL_VelObsIne rt	Inertia value for velocity observer System inertia that is used for velocity observer calculations. The default value is the inertia of the mounted motor. In the case of autotuning, the value of this parameter can be set equal to that of _AT_J. Setting can only be changed if power stage is disabled. Changed settings become active immediately.	g cm^2 1 - 2147483648	UINT32 UINT32 R/W per. expert	CANopen 3011:24$_h$ Modbus 4424
CTRL_vPIDDPart	PID velocity controller: D gain In increments of 0.1 %. Changed settings become active immediately.	% 0.0 0.0 400.0	UINT16 UINT16 R/W per. expert	CANopen 3011:6$_h$ Modbus 4364
CTRL_vPIDDTime	PID velocity controller: Time constant of D term smoothing filter In increments of 0.01 ms. Changed settings become active immediately.	ms 0.01 0.25 10.00	UINT16 UINT16 R/W per. expert	CANopen 3011:5$_h$ Modbus 4362

0198441113956, V1.00, 07.2013

Parameter name	Description	Unit Minimum value Factory setting Maximum value	Data type R/W Persistent Expert	Parameter address via field-bus
CTRL1_KFPp	Velocity feed-forward control (133) In the case of switching between the two controller parameter sets, the values are adapted linearly over the time defined in the parameter CTRL_ParChgTime. In increments of 0.1 %. Changed settings become active immediately.	% 0.0 0.0 200.0	UINT16 UINT16 R/W per. -	CANopen 3012:6h Modbus 4620
CTRL1_Kfric	Friction compensation: Gain (279) In increments of 0.01 A_{rms}. Changed settings become active immediately.	A_{rms} 0.00 0.00 10.00	UINT16 UINT16 R/W per. expert	CANopen 3012:10h Modbus 4640
CTRL1_KPn	Velocity controller P gain (168) The default value is calculated on the basis of the motor parameters. In the case of switching between the two controller parameter sets, the values are adapted linearly over the time defined in the parameter CTRL_ParChgTime. In increments of 0.0001 A/min^{-1}. Changed settings become active immediately.	A/min^{-1} 0.0001 - 2.5400	UINT16 UINT16 R/W per. -	CANopen 3012:1h Modbus 4610
CTRL1_KPp	Position controller P gain (173) The default value is calculated. In the case of switching between the two controller parameter sets, the values are adapted linearly over the time defined in the parameter CTRL_ParChgTime. In increments of 0.1 1/s. Changed settings become active immediately.	1/s 2.0 - 900.0	UINT16 UINT16 R/W per. -	CANopen 3012:3h Modbus 4614
CTRL1_Nf1bandw	Notch filter 1: Bandwidth (278) Definition of bandwidth: 1 - Fb/F0 In increments of 0.1 %. Changed settings become active immediately.	% 1.0 70.0 90.0	UINT16 UINT16 R/W per. expert	CANopen 3012:Ah Modbus 4628
CTRL1_Nf1damp	Notch filter 1: Damping (278) In increments of 0.1 %. Changed settings become active immediately.	% 55.0 90.0 99.0	UINT16 UINT16 R/W per. expert	CANopen 3012:8h Modbus 4624
CTRL1_Nf1freq	Notch filter 1: Frequency (278) The filter is switched off at a value of 15000. In increments of 0.1 Hz. Changed settings become active immediately.	Hz 50.0 1500.0 1500.0	UINT16 UINT16 R/W per. expert	CANopen 3012:9h Modbus 4626

0198441113956, V1.00, 07.2013

Parameter name	Description	Unit Minimum value Factory setting Maximum value	Data type R/W Persistent Expert	Parameter address via field-bus
CTRL1_Nf2bandw	Notch filter 2: Bandwidth (278) Definition of bandwidth: 1 - Fb/F0 In increments of 0.1 %. Changed settings become active immediately.	% 1.0 70.0 90.0	UINT16 UINT16 R/W per. expert	CANopen 3012:D_h Modbus 4634
CTRL1_Nf2damp	Notch filter 2: Damping (278) In increments of 0.1 %. Changed settings become active immediately.	% 55.0 90.0 99.0	UINT16 UINT16 R/W per. expert	CANopen 3012:B_h Modbus 4630
CTRL1_Nf2freq	Notch filter 2: Frequency (278) The filter is switched off at a value of 15000. In increments of 0.1 Hz. Changed settings become active immediately.	Hz 50.0 1500.0 1500.0	UINT16 UINT16 R/W per. expert	CANopen 3012:C_h Modbus 4632
CTRL1_Osupdamp	Overshoot suppression filter: Damping (278) The filter is switched off at a value of 0. In increments of 0.1 %. Changed settings become active immediately.	% 0.0 0.0 50.0	UINT16 UINT16 R/W per. expert	CANopen 3012:E_h Modbus 4636
CTRL1_Osupdelay	Overshoot suppression filter: Time delay (279) The filter is switched off at a value of 0. In increments of 0.01 ms. Changed settings become active immediately.	ms 0.00 0.00 75.00	UINT16 UINT16 R/W per. expert	CANopen 3012:F_h Modbus 4638
CTRL1_TAUiref	Filter time constant of the reference current value filter (277) In the case of switching between the two controller parameter sets, the values are adapted linearly over the time defined in the parameter CTRL_ParChgTime. In increments of 0.01 ms. Changed settings become active immediately.	ms 0.00 0.50 4.00	UINT16 UINT16 R/W per. -	CANopen 3012:5_h Modbus 4618
CTRL1_TAUnref	Filter time constant of the reference velocity value filter (169) In the case of switching between the two controller parameter sets, the values are adapted linearly over the time defined in the parameter CTRL_ParChgTime. In increments of 0.01 ms. Changed settings become active immediately.	ms 0.00 1.81 327.67	UINT16 UINT16 R/W per. -	CANopen 3012:4_h Modbus 4616

0198441113956, V1.00, 07.2013

Parameter name	Description	Unit Minimum value Factory setting Maximum value	Data type R/W Persistent Expert	Parameter address via field-bus
CTRL1_TNn	Velocity controller integral action time (168) The default value is calculated. In the case of switching between the two controller parameter sets, the values are adapted linearly over the time defined in the parameter CTRL_ParChgTime. In increments of 0.01 ms. Changed settings become active immediately.	ms 0.00 - 327.67	UINT16 UINT16 R/W per. -	CANopen 3012:2h Modbus 4612
CTRL2_KFPp	Velocity feed-forward control (133) In the case of switching between the two controller parameter sets, the values are adapted linearly over the time defined in the parameter CTRL_ParChgTime. In increments of 0.1 %. Changed settings become active immediately.	% 0.0 0.0 200.0	UINT16 UINT16 R/W per. -	CANopen 3013:6h Modbus 4876
CTRL2_Kfric	Friction compensation: Gain (280) In increments of 0.01 A_{rms}. Changed settings become active immediately.	A_{rms} 0.00 0.00 10.00	UINT16 UINT16 R/W per. expert	CANopen 3013:10h Modbus 4896
CTRL2_KPn	Velocity controller P gain (168) The default value is calculated on the basis of the motor parameters. In the case of switching between the two controller parameter sets, the values are adapted linearly over the time defined in the parameter CTRL_ParChgTime. In increments of 0.0001 A/min^{-1}. Changed settings become active immediately.	A/min^{-1} 0.0001 - 2.5400	UINT16 UINT16 R/W per. -	CANopen 3013:1h Modbus 4866
CTRL2_KPp	Position controller P gain (173) The default value is calculated. In the case of switching between the two controller parameter sets, the values are adapted linearly over the time defined in the parameter CTRL_ParChgTime. In increments of 0.1 1/s. Changed settings become active immediately.	1/s 2.0 - 900.0	UINT16 UINT16 R/W per. -	CANopen 3013:3h Modbus 4870
CTRL2_Nf1bandw	Notch filter 1: Bandwidth (280) Definition of bandwidth: 1 - Fb/F0 In increments of 0.1 %. Changed settings become active immediately.	% 1.0 70.0 90.0	UINT16 UINT16 R/W per. expert	CANopen 3013:Ah Modbus 4884

0198441113956, V1.00, 07.2013

Parameter name	Description	Unit Minimum value Factory setting Maximum value	Data type R/W Persistent Expert	Parameter address via field-bus
CTRL2_Nf1damp	Notch filter 1: Damping (280) In increments of 0.1 %. Changed settings become active immediately.	% 55.0 90.0 99.0	UINT16 UINT16 R/W per. expert	CANopen 3013:8h Modbus 4880
CTRL2_Nf1freq	Notch filter 1: Frequency (280) The filter is switched off at a value of 15000. In increments of 0.1 Hz. Changed settings become active immediately.	Hz 50.0 1500.0 1500.0	UINT16 UINT16 R/W per. expert	CANopen 3013:9h Modbus 4882
CTRL2_Nf2bandw	Notch filter 2: Bandwidth (281) Definition of bandwidth: 1 - Fb/F0 In increments of 0.1 %. Changed settings become active immediately.	% 1.0 70.0 90.0	UINT16 UINT16 R/W per. expert	CANopen 3013:Dh Modbus 4890
CTRL2_Nf2damp	Notch filter 2: Damping (281) In increments of 0.1 %. Changed settings become active immediately.	% 55.0 90.0 99.0	UINT16 UINT16 R/W per. expert	CANopen 3013:Bh Modbus 4886
CTRL2_Nf2freq	Notch filter 2: Frequency (281) The filter is switched off at a value of 15000. In increments of 0.1 Hz. Changed settings become active immediately.	Hz 50.0 1500.0 1500.0	UINT16 UINT16 R/W per. expert	CANopen 3013:Ch Modbus 4888
CTRL2_Osupdamp	Overshoot suppression filter: Damping (281) The filter is switched off at a value of 0. In increments of 0.1 %. Changed settings become active immediately.	% 0.0 0.0 50.0	UINT16 UINT16 R/W per. expert	CANopen 3013:Eh Modbus 4892
CTRL2_Osupdelay	Overshoot suppression filter: Time delay (281) The filter is switched off at a value of 0. In increments of 0.01 ms. Changed settings become active immediately.	ms 0.00 0.00 75.00	UINT16 UINT16 R/W per. expert	CANopen 3013:Fh Modbus 4894
CTRL2_TAUiref	Filter time constant of the reference current value filter (281) In the case of switching between the two controller parameter sets, the values are adapted linearly over the time defined in the parameter CTRL_ParChgTime. In increments of 0.01 ms. Changed settings become active immediately.	ms 0.00 0.50 4.00	UINT16 UINT16 R/W per. -	CANopen 3013:5h Modbus 4874

0198441113956, V1.00, 07.2013

Parameter name	Description	Unit Minimum value Factory setting Maximum value	Data type R/W Persistent Expert	Parameter address via field-bus
CTRL2_TAUnref	Filter time constant of the reference velocity value filter (169) In the case of switching between the two controller parameter sets, the values are adapted linearly over the time defined in the parameter CTRL_ParChgTime. In increments of 0.01 ms. Changed settings become active immediately.	ms 0.00 1.81 327.67	UINT16 UINT16 R/W per. -	CANopen 3013:4$_h$ Modbus 4872
CTRL2_TNn	Velocity controller integral action time (168) The default value is calculated. In the case of switching between the two controller parameter sets, the values are adapted linearly over the time defined in the parameter CTRL_ParChgTime. In increments of 0.01 ms. Changed settings become active immediately.	ms 0.00 - 327.67	UINT16 UINT16 R/W per. -	CANopen 3013:2$_h$ Modbus 4868
DCOMcontrol	DriveCom control word (193) Refer to chapter Operation, Operating States, for bit coding information. Bit 0: Switch on Bit 1: Enable Voltage Bit 2: Quick Stop Bit 3: Enable Operation Bits 4 ... 6: Operating mode specific Bit 7: Fault Reset Bit 8: Halt Bit 9: Change on setpoint Bits 10 ... 15: Reserved (must be 0) Changed settings become active immediately.	- - - -	UINT16 UINT16 R/W - -	CANopen 6040:0$_h$ Modbus 6914
DCOMopmode	Operating mode (134) **-6 / Manual Tuning / Autotuning**: Manual Tuning or Autotuning **-1 / Jog**: Jog **0 / Reserved**: Reserved **1 / Profile Position**: Profile Position **3 / Profile Velocity**: Profile Velocity **4 / Profile Torque**: Profile Torque **6 / Homing**: Homing **7 / Interpolated Position**: Interpolated Position **8 / Cyclic Synchronous Position**: Cyclic Synchronous Position **9 / Cyclic Synchronous Velocity**: Cyclic Synchronous Velocity **10 / Cyclic Synchronous Torque**: Cyclic Synchronous Torque Changed settings become active immediately.	- -6 - 10	INT8 INT16 R/W - -	CANopen 6060:0$_h$ Modbus 6918

0198441113956, V1.00, 07.2013

Parameter name	Description	Unit Minimum value Factory setting Maximum value	Data type R/W Persistent Expert	Parameter address via field-bus
DI_0_Debounce	Debounce time of DI0 (261) **0 / No**: No software debouncing **1 / 0.25 ms**: 0.25 ms **2 / 0.50 ms**: 0.50 ms **3 / 0.75 ms**: 0.75 ms **4 / 1.00 ms**: 1.00 ms **5 / 1.25 ms**: 1.25 ms **6 / 1.50 ms**: 1.50 ms Setting can only be changed if power stage is disabled. Changed settings become active immediately.	- 0 6 6	UINT16 UINT16 R/W per. -	CANopen 3008:20$_h$ Modbus 2112
DI_1_Debounce	Debounce time of DI1 (261) **0 / No**: No software debouncing **1 / 0.25 ms**: 0.25 ms **2 / 0.50 ms**: 0.50 ms **3 / 0.75 ms**: 0.75 ms **4 / 1.00 ms**: 1.00 ms **5 / 1.25 ms**: 1.25 ms **6 / 1.50 ms**: 1.50 ms Setting can only be changed if power stage is disabled. Changed settings become active immediately.	- 0 6 6	UINT16 UINT16 R/W per. -	CANopen 3008:21$_h$ Modbus 2114
DI_2_Debounce	Debounce time of DI2 (261) **0 / No**: No software debouncing **1 / 0.25 ms**: 0.25 ms **2 / 0.50 ms**: 0.50 ms **3 / 0.75 ms**: 0.75 ms **4 / 1.00 ms**: 1.00 ms **5 / 1.25 ms**: 1.25 ms **6 / 1.50 ms**: 1.50 ms Setting can only be changed if power stage is disabled. Changed settings become active immediately.	- 0 6 6	UINT16 UINT16 R/W per. -	CANopen 3008:22$_h$ Modbus 2116
DI_3_Debounce	Debounce time of DI3 (261) **0 / No**: No software debouncing **1 / 0.25 ms**: 0.25 ms **2 / 0.50 ms**: 0.50 ms **3 / 0.75 ms**: 0.75 ms **4 / 1.00 ms**: 1.00 ms **5 / 1.25 ms**: 1.25 ms **6 / 1.50 ms**: 1.50 ms Setting can only be changed if power stage is disabled. Changed settings become active immediately.	- 0 6 6	UINT16 UINT16 R/W per. -	CANopen 3008:23$_h$ Modbus 2118

0198441113956, V1.00, 07.2013

Parameter name	Description	Unit Minimum value Factory setting Maximum value	Data type R/W Persistent Expert	Parameter address via field-bus
DPL_Activate	Activation of Drive Profile Lexium Value 0: Deactivate Drive Profile Lexium Value 1: Activate Drive Profile Lexium The access channel via which the drive profile has been activated is the only access channel that can use the drive profile. Changed settings become active immediately.	- 0 0 1	UINT16 UINT16 R/W - -	CANopen 301B:8_h Modbus 6928
DPL_dmControl	Drive Profile Lexium dmControl	- - - -	UINT16 UINT16 R/W - -	CANopen 301B:$1F_h$ Modbus 6974
DPL_intLim	Setting for bit 9 of _DPL_motionStat and _actionStatus **0 / None**: Not used (reserved) **1 / Current Below Threshold**: Current threshold value **2 / Velocity Below Threshold**: Velocity threshold value **3 / In Position Deviation Window**: Position deviation window **4 / In Velocity Deviation Window**: Velocity deviation window **5 / Position Register Channel 1**: Position register channel 1 **6 / Position Register Channel 2**: Position register channel 2 **7 / Position Register Channel 3**: Position register channel 3 **8 / Position Register Channel 4**: Position register channel 4 **9 / Hardware Limit Switch**: Hardware limit switch **10 / RMAC active or finished**: Relative movement after capture is active or finished **11 / Position Window**: Position window Setting for: Bit 9 of the parameter _actionStatus Bit 9 of the parameter _DPL_motionStat Changed settings become active immediately.	- 0 11 11	UINT16 UINT16 R/W per. -	CANopen 301B:35_h Modbus 7018
DPL_RefA16	Drive Profile Lexium RefA16	- - - -	INT16 INT16 R/W - -	CANopen 301B:22_h Modbus 6980
DPL_RefB32	Drive Profile Lexium RefB32	- - - -	INT32 INT32 R/W - -	CANopen 301B:21_h Modbus 6978

0198441113956, V1.00, 07.2013

Parameter name	Description	Unit Minimum value Factory setting Maximum value	Data type R/W Persistent Expert	Parameter address via field-bus
DS402compatib	DS402 state machine: State transition from 3 to 4 **0 / Automatic**: Automatic (state transition is performed automatically) **1 / DS402-compliant**: DS402-compliant (state transition must be controlled via the fieldbus) Determines the state transition between the states SwitchOnDisabled (3) and Ready-ToSwitchOn (4). Setting can only be changed if power stage is disabled. Changed settings become active immediately.	- 0 0 1	UINT16 UINT16 R/W per. -	CANopen 301B:13h Modbus 6950
DS402intLim	DS402 status word: Setting for bit 11 (internal limit) (283) **0 / None**: Not used (reserved) **1 / Current Below Threshold**: Current threshold value **2 / Velocity Below Threshold**: Velocity threshold value **3 / In Position Deviation Window**: Position deviation window **4 / In Velocity Deviation Window**: Velocity deviation window **5 / Position Register Channel 1**: Position register channel 1 **6 / Position Register Channel 2**: Position register channel 2 **7 / Position Register Channel 3**: Position register channel 3 **8 / Position Register Channel 4**: Position register channel 4 **9 / Hardware Limit Switch**: Hardware limit switch **10 / RMAC active or finished**: Relative movement after capture is active or finished **11 / Position Window**: Position window Setting for: Bit 11 of the parameter _DCOMstatus Bit 10 of the parameter _actionStatus Bit 10 of the parameter _DPL_motionStat Changed settings become active immediately.	- 0 0 11	UINT16 UINT16 R/W per. -	CANopen 301B:1Eh Modbus 6972
ECAT2ndaddress	Value for an EtherCAT Identification (139) Value for an EtherCAT "Identification" (also known as "Station Alias"), for example, for the EtherCAT function Hot Connect. Changed settings become active the next time the product is switched on.	- 0 0 65535	UINT16 UINT16 R/W per. -	CANopen 3045:6h Modbus 17676

0198441113956, V1.00, 07.2013

Parameter name	Description	Unit Minimum value Factory setting Maximum value	Data type R/W Persistent Expert	Parameter address via field-bus
ENC1_adjustment	Adjustment of absolute position of encoder 1 (152) The value range depends on the encoder type. Singleturn encoder: 0 ... x-1 Multiturn encoder: 0 ... (4096*x)-1 Singleturn encoder (shifted with parameter ShiftEncWorkRang): -(x/2) ... (x/2)-1 Multiturn encoder (shifted with parameter ShiftEncWorkRang): -(2048*x) ... (2048*x)-1 Definition of 'x': Maximum position for one encoder turn in user-defined units. This value is 16384 with the default scaling. NOTE: * If processing is to be performed with inversion of the direction of movement, this must be set before the encoder position is adjusted. * After the write access, a wait time of at least 1 second is required before the drive is switched off. Changed settings become active the next time the product is switched on.	usr_p - - -	INT32 INT32 R/W - -	CANopen 3005:16$_h$ Modbus 1324
ERR_clear	Clear error memory (357) Value 1: Delete entries in the error memory The clearing process is completed if a 0 is returned after a read access. Changed settings become active immediately.	- 0 - 1	UINT16 UINT16 R/W - -	CANopen 303B:4$_h$ Modbus 15112
ERR_reset	Reset error memory read pointer (357) Value 1: Set error memory read pointer to oldest error entry. Changed settings become active immediately.	- 0 - 1	UINT16 UINT16 R/W - -	CANopen 303B:5$_h$ Modbus 15114

0198441113956, V1.00, 07.2013

Parameter name	Description	Unit Minimum value Factory setting Maximum value	Data type R/W Persistent Expert	Parameter address via field-bus
ErrorResp_bit_DE	Error response to data error (DE bit) **-1 / No Error Response**: No error response **0 / Warning**: Warning **1 / Error Class 1**: Error class 1 **2 / Error Class 2**: Error class 2 **3 / Error Class 3**: Error class 3 For the Drive Profile Lexium, the error response to data error (DE bit) can be parameterized. For EtherCAT RxPDO data error handling, this parameter is also used to classify the error response.	- -1 -1 3	INT16 INT16 R/W per. -	CANopen 301B:6h Modbus 6924
ErrorResp_bit_ME	Error response to mode error (ME bit) **-1 / No Error Response**: No error response **0 / Warning**: Warning **1 / Error Class 1**: Error class 1 **2 / Error Class 2**: Error class 2 **3 / Error Class 3**: Error class 3 For Drive Profile Lexium, the error response for an mode error (ME bit) can be parameterized.	- -1 -1 3	INT16 INT16 R/W per. -	CANopen 301B:7h Modbus 6926
ErrorResp_Flt_AC	Error response to missing mains phase (330) **1 / Error Class 1**: Error class 1 **2 / Error Class 2**: Error class 2 **3 / Error Class 3**: Error class 3 Setting can only be changed if power stage is disabled. Changed settings become active the next time the power stage is enabled.	- 1 2 3	UINT16 UINT16 R/W per. -	CANopen 3005:Ah Modbus 1300
ErrorResp_I2tRES	Error response to 100% I2t braking resistor **0 / Warning**: Warning (error class 0) **1 / Error Class 1**: Error class 1 **2 / Error Class 2**: Error class 2 Setting can only be changed if power stage is disabled. Changed settings become active the next time the power stage is enabled.	- 0 0 2	UINT16 UINT16 R/W per. -	CANopen 3005:22h Modbus 1348
ErrorResp_p_dif	Error response to following error (307) **1 / Error Class 1**: Error class 1 **2 / Error Class 2**: Error class 2 **3 / Error Class 3**: Error class 3 Setting can only be changed if power stage is disabled. Changed settings become active the next time the power stage is enabled.	- 1 3 3	UINT16 UINT16 R/W per. -	CANopen 3005:Bh Modbus 1302

0198441113956, V1.00, 07.2013

Parameter name	Description	Unit Minimum value Factory setting Maximum value	Data type R/W Persistent Expert	Parameter address via field-bus
HMdis	Distance from switching point (224) The distance from the switching point is defined as the reference point. The parameter is only effective during a reference movement without index pulse. Changed settings become active the next time the motor moves.	usr_p 1 200 2147483647	INT32 INT32 R/W per. -	CANopen 3028:7$_h$ Modbus 10254
HMmethod	Homing method (223) 1: LIMN with index pulse 2: LIMP with index pulse 7: REF+ with index pulse, inv., outside 8: REF+ with index pulse, inv., inside 9: REF+ with index pulse, not inv., inside 10: REF+ with index pulse, not inv., outside 11: REF- with index pulse, inv., outside 12: REF- with index pulse, inv., inside 13: REF- with index pulse, not inv., inside 14: REF- with index pulse, not inv., outside 17: LIMN 18: LIMP 23: REF+, inv., outside 24: REF+, inv., inside 25: REF+, not inv., inside 26: REF+, not inv., outside 27: REF-, inv., outside 28: REF-, inv., inside 29: REF-, not inv., inside 30: REF-, not inv., outside 33: Index pulse neg. direction 34: Index pulse pos. direction 35: Position setting Abbreviations: REF+: Search movement in pos. direction REF-: Search movement in neg. direction inv.: Invert direction in switch not inv.: Direction not inverted in switch outside: Index pulse / distance outside switch inside: Index pulse / distance inside switch Changed settings become active immediately.	- 1 18 35	INT8 INT16 R/W - -	CANopen 6098:0$_h$ Modbus 6936
HMoutdis	Maximum distance for search for switching point (225) 0: Monitoring of distance inactive >0: Maximum distance After detection of the switch, the drive starts to search for the defined switching point. If the defined switching point is not found within the distance defined here, the reference movement is canceled with an error. Changed settings become active the next time the motor moves.	usr_p 0 0 2147483647	INT32 INT32 R/W per. -	CANopen 3028:6$_h$ Modbus 10252

0198441113956, V1.00, 07.2013

Parameter name	Description	Unit Minimum value Factory setting Maximum value	Data type R/W Persistent Expert	Parameter address via field-bus
HMp_home	Position at reference point (224) After a successful reference movement, this position is automatically set at the reference point. Changed settings become active the next time the motor moves.	usr_p -2147483648 0 2147483647	INT32 INT32 R/W per. -	CANopen 3028:B_h Modbus 10262
HMp_setP	Position for Position Setting (231) Position for operating mode Homing, method 35. Changed settings become active immediately.	usr_p - 0 -	INT32 INT32 R/W - -	CANopen 301B:16_h Modbus 6956
HMprefmethod	Preferred homing method (223) Changed settings become active immediately.	- 1 18 35	INT16 INT16 R/W per. -	CANopen 3028:A_h Modbus 10260
HMsrchdis	Maximum search distance after overtravel of switch (225) 0: Search distance monitoring disabled >0: Search distance The switch must be activated again within this search distance, otherwise the reference movement is canceled. Changed settings become active the next time the motor moves.	usr_p 0 0 2147483647	INT32 INT32 R/W per. -	CANopen 3028:D_h Modbus 10266
HMv_out	Target velocity for moving away from switch (226) The adjustable value is internally limited to the current parameter setting in RAMP_v_max. Changed settings become active the next time the motor moves.	usr_v 1 6 2147483647	UINT32 UINT32 R/W per. -	CANopen 6099:2_h Modbus 10250
HMv	Target velocity for searching the switch (226) The adjustable value is internally limited to the current parameter setting in RAMP_v_max. Changed settings become active the next time the motor moves.	usr_v 1 60 2147483647	UINT32 UINT32 R/W per. -	CANopen 6099:1_h Modbus 10248

0198441113956, V1.00, 07.2013

Parameter name	Description	Unit Minimum value Factory setting Maximum value	Data type R/W Persistent Expert	Parameter address via field-bus
`InvertDirOfMove`	Inversion of direction of movement (150) **0 / Inversion Off**: Inversion of direction of movement is off **1 / Inversion On**: Inversion of direction of movement is on The limit switch which is reached with a movement in positive direction must be connected to the positive limit switch input and vice versa. Setting can only be changed if power stage is disabled. Changed settings become active the next time the product is switched on.	- 0 0 1	UINT16 UINT16 R/W per. -	CANopen 3006:C_h Modbus 1560
`IO_AutoEnable`	Enabling the power stage at PowerOn **0 / RisingEdge**: After start-up, a rising edge with the signal input function Enable enables the power stage **1 / HighLevel**: After start-up, an active signal input with signal input function Enable enables the power stage **2 / AutoOn**: After start-up, the power stage is automatically enabled Changed settings become active the next time the power stage is enabled.	- 0 0 2	UINT16 UINT16 R/W per. -	CANopen 3005:6_h Modbus 1292
`IO_AutoEnaConfig`	Enables the power stage as set via IO_AutoEnable even after error **0 / Off**: Setting in parameter IO_AutoEnable is only used after start-up **1 / On**: Setting in parameter IO_AutoEnable is used after start-up and after error Changed settings become active the next time the power stage is enabled.	- 0 0 1	UINT16 UINT16 R/W per. -	CANopen 3005:4_h Modbus 1288
`IO_DQ_set`	Setting the digital outputs directly (293) Write access to output bits is only active if the signal pin is available as an output and if the function of the output was set to 'Available as required'. Coding of the individual signals: Bit 0: DQ0 Bit 1: DQ1	- - - -	UINT16 UINT16 R/W - -	CANopen 3008:11_h Modbus 2082
`IO_FaultResOnEnaInp`	Additional 'Fault Reset' for the signal input function 'Enable' (191) **0 / Off**: No additional 'Fault Reset' **1 / OnFallingEdge**: Additional 'Fault Reset' during falling edge **2 / OnRisingEdge**: Additional 'Fault Reset' during rising edge Changed settings become active the next time the power stage is enabled.	- 0 0 2	UINT16 UINT16 R/W per. -	CANopen 3005:34_h Modbus 1384

0198441113956, V1.00, 07.2013

Parameter name	Description	Unit Minimum value Factory setting Maximum value	Data type R/W Persistent Expert	Parameter address via field-bus
IO_I_limit	Current limitation via input (290) A current limit can be activated via a digital input. In increments of 0.01 A_{rms}. Changed settings become active immediately.	A_{rms} 0.00 0.20 300.00	UINT16 UINT16 R/W per. -	CANopen 3006:27$_h$ Modbus 1614
IO_JOGmethod	Selection of jog method (201) **0 / Continuous Movement**: Jog with continuous movement **1 / Step Movement**: Jog with step movement Changed settings become active the next time the motor moves.	- 0 1 1	UINT16 UINT16 R/W per. -	CANopen 3005:18$_h$ Modbus 1328
IO_v_limit	Velocity limitation via input (289) A velocity limitation can be activated via a digital input. NOTE: In operating mode Profile Torque, the minimum velocity is internally limited to 100 min^{-1}. Changed settings become active immediately.	usr_v 0 10 2147483647	UINT32 UINT32 R/W per. -	CANopen 3006:1E$_h$ Modbus 1596

0198441113956, V1.00, 07.2013

Parameter name	Description	Unit Minimum value Factory setting Maximum value	Data type R/W Persistent Expert	Parameter address via field-bus
IOfunct_DI0	Function Input DI0 (254) **1 / Freely Available**: Available as required **2 / Fault Reset**: Fault reset after error **3 / Enable**: Enables the power stage **4 / Halt**: Halt **5 / Start Profile Positioning**: Start request for movement **6 / Current Limitation**: Limits the current to parameter value **7 / Zero Clamp**: Zero clamping **8 / Velocity Limitation**: Limits the velocity to parameter value **21 / Reference Switch (REF)**: Reference switch **22 / Positive Limit Switch (LIMP)**: Positive limit switch **23 / Negative Limit Switch (LIMN)**: Negative limit switch **24 / Switch Controller Parameter Set**: Switches controller parameter set **28 / Velocity Controller Integral Off**: Switches off velocity controller integral term **30 / Start Signal Of RMAC**: Start signal of relative movement after capture (RMAC) **31 / Activate RMAC**: Activates the relative movement after capture (RMAC) **33 / Jog Positive With Enable**: Jog: Enables power stage and moves in positive direction **34 / Jog Negative With Enable**: Jog: Enables power stage and moves in negative direction **40 / Release Holding Brake**: Releases the holding brake Setting can only be changed if power stage is disabled. Changed settings become active the next time the product is switched on.	- - - -	UINT16 UINT16 R/W per. -	CANopen 3007:1$_h$ Modbus 1794

0198441113956, V1.00, 07.2013

Parameter name	Description	Unit Minimum value Factory setting Maximum value	Data type R/W Persistent Expert	Parameter address via field-bus
IOfunct_DI1	Function Input DI1 (255) **1 / Freely Available**: Available as required **2 / Fault Reset**: Fault reset after error **3 / Enable**: Enables the power stage **4 / Halt**: Halt **5 / Start Profile Positioning**: Start request for movement **6 / Current Limitation**: Limits the current to parameter value **7 / Zero Clamp**: Zero clamping **8 / Velocity Limitation**: Limits the velocity to parameter value **21 / Reference Switch (REF)**: Reference switch **22 / Positive Limit Switch (LIMP)**: Positive limit switch **23 / Negative Limit Switch (LIMN)**: Negative limit switch **24 / Switch Controller Parameter Set**: Switches controller parameter set **28 / Velocity Controller Integral Off**: Switches off velocity controller integral term **30 / Start Signal Of RMAC**: Start signal of relative movement after capture (RMAC) **31 / Activate RMAC**: Activates the relative movement after capture (RMAC) **33 / Jog Positive With Enable**: Jog: Enables power stage and moves in positive direction **34 / Jog Negative With Enable**: Jog: Enables power stage and moves in negative direction **40 / Release Holding Brake**: Releases the holding brake Setting can only be changed if power stage is disabled. Changed settings become active the next time the product is switched on.	- - - -	UINT16 UINT16 R/W per. -	CANopen 3007:2_h Modbus 1796

0198441113956, V1.00, 07.2013

Parameter name	Description	Unit Minimum value Factory setting Maximum value	Data type R/W Persistent Expert	Parameter address via field-bus
IOfunct_DI2	Function Input DI2 (256) **1 / Freely Available**: Available as required **2 / Fault Reset**: Fault reset after error **3 / Enable**: Enables the power stage **4 / Halt**: Halt **5 / Start Profile Positioning**: Start request for movement **6 / Current Limitation**: Limits the current to parameter value **7 / Zero Clamp**: Zero clamping **8 / Velocity Limitation**: Limits the velocity to parameter value **21 / Reference Switch (REF)**: Reference switch **22 / Positive Limit Switch (LIMP)**: Positive limit switch **23 / Negative Limit Switch (LIMN)**: Negative limit switch **24 / Switch Controller Parameter Set**: Switches controller parameter set **28 / Velocity Controller Integral Off**: Switches off velocity controller integral term **30 / Start Signal Of RMAC**: Start signal of relative movement after capture (RMAC) **31 / Activate RMAC**: Activates the relative movement after capture (RMAC) **33 / Jog Positive With Enable**: Jog: Enables power stage and moves in positive direction **34 / Jog Negative With Enable**: Jog: Enables power stage and moves in negative direction **40 / Release Holding Brake**: Releases the holding brake Setting can only be changed if power stage is disabled. Changed settings become active the next time the product is switched on.	- - - -	UINT16 UINT16 R/W per. -	CANopen 3007:3_h Modbus 1798

0198441113956, V1.00, 07.2013

Parameter name	Description	Unit Minimum value Factory setting Maximum value	Data type R/W Persistent Expert	Parameter address via field-bus
IOfunct_DI3	Function Input DI3 (257) **1 / Freely Available**: Available as required **2 / Fault Reset**: Fault reset after error **3 / Enable**: Enables the power stage **4 / Halt**: Halt **5 / Start Profile Positioning**: Start request for movement **6 / Current Limitation**: Limits the current to parameter value **7 / Zero Clamp**: Zero clamping **8 / Velocity Limitation**: Limits the velocity to parameter value **21 / Reference Switch (REF)**: Reference switch **22 / Positive Limit Switch (LIMP)**: Positive limit switch **23 / Negative Limit Switch (LIMN)**: Negative limit switch **24 / Switch Controller Parameter Set**: Switches controller parameter set **28 / Velocity Controller Integral Off**: Switches off velocity controller integral term **30 / Start Signal Of RMAC**: Start signal of relative movement after capture (RMAC) **31 / Activate RMAC**: Activates the relative movement after capture (RMAC) **33 / Jog Positive With Enable**: Jog: Enables power stage and moves in positive direction **34 / Jog Negative With Enable**: Jog: Enables power stage and moves in negative direction **40 / Release Holding Brake**: Releases the holding brake Setting can only be changed if power stage is disabled. Changed settings become active the next time the product is switched on.	- - - -	UINT16 UINT16 R/W per. -	CANopen 3007:4$_h$ Modbus 1800

0198441113956, V1.00, 07.2013

Parameter name	Description	Unit Minimum value Factory setting Maximum value	Data type R/W Persistent Expert	Parameter address via field-bus
IOfunct_DQ0	Function Output DQ0 (259) **1 / Freely Available**: Available as required **2 / No Fault**: Signals operating states Ready To Switch On, Switched On and Operation Enabled **3 / Active**: Signals operating state Operation Enabled **4 / RMAC Active Or Finished**: Relative movement after capture active or finished (RMAC) **5 / In Position Deviation Window**: Position deviation is within window **6 / In Velocity Deviation Window**: Velocity deviation is within window **7 / Velocity Below Threshold**: Motor velocity below threshold **8 / Current Below Threshold**: Motor current below threshold **9 / Halt Acknowledge**: Halt acknowledgement **13 / Motor Standstill**: Motor at a standstill **14 / Selected Error**: One of the selected errors is active **15 / Valid Reference (ref_ok)**: Drive has a valid reference (ref_ok) **16 / Selected Warning**: One of the selected warnings is active **18 / Position Register Channel 1**: Position register channel 1 **19 / Position Register Channel 2**: Position register channel 2 **20 / Position Register Channel 3**: Position register channel 3 **21 / Position Register Channel 4**: Position register channel 4 **22 / Motor Moves Positive**: Motor moves in positive direction **23 / Motor Moves Negative**: Motor moves in negative direction Setting can only be changed if power stage is disabled. Changed settings become active the next time the product is switched on.	- - - -	UINT16 UINT16 R/W per. -	CANopen 3007:9_h Modbus 1810

0198441113956, V1.00, 07.2013

Parameter name	Description	Unit Minimum value Factory setting Maximum value	Data type R/W Persistent Expert	Parameter address via field-bus
IOfunct_DQ1	Function Output DQ1 (260) **1 / Freely Available**: Available as required **2 / No Fault**: Signals operating states Ready To Switch On, Switched On and Operation Enabled **3 / Active**: Signals operating state Operation Enabled **4 / RMAC Active Or Finished**: Relative movement after capture active or finished (RMAC) **5 / In Position Deviation Window**: Position deviation is within window **6 / In Velocity Deviation Window**: Velocity deviation is within window **7 / Velocity Below Threshold**: Motor velocity below threshold **8 / Current Below Threshold**: Motor current below threshold **9 / Halt Acknowledge**: Halt acknowledgement **13 / Motor Standstill**: Motor at a standstill **14 / Selected Error**: One of the selected errors is active **15 / Valid Reference (ref_ok)**: Drive has a valid reference (ref_ok) **16 / Selected Warning**: One of the selected warnings is active **18 / Position Register Channel 1**: Position register channel 1 **19 / Position Register Channel 2**: Position register channel 2 **20 / Position Register Channel 3**: Position register channel 3 **21 / Position Register Channel 4**: Position register channel 4 **22 / Motor Moves Positive**: Motor moves in positive direction **23 / Motor Moves Negative**: Motor moves in negative direction Setting can only be changed if power stage is disabled. Changed settings become active the next time the product is switched on.	- - - -	UINT16 UINT16 R/W per. -	CANopen 3007:A_h Modbus 1812
IOsigLIMN	Signal evaluation for negative limit switch (301) **0 / Inactive**: Inactive **1 / Normally closed**: Normally closed NC **2 / Normally open**: Normally open NO Setting can only be changed if power stage is disabled. Changed settings become active the next time the power stage is enabled.	- 0 1 2	UINT16 UINT16 R/W per. -	CANopen 3006:F_h Modbus 1566

0198441113956, V1.00, 07.2013

Parameter name	Description	Unit Minimum value Factory setting Maximum value	Data type R/W Persistent Expert	Parameter address via field-bus
IOsigLIMP	Signal evaluation for positive limit switch (301) **0 / Inactive**: Inactive **1 / Normally closed**: Normally closed NC **2 / Normally open**: Normally open NO Setting can only be changed if power stage is disabled. Changed settings become active the next time the power stage is enabled.	- 0 1 2	UINT16 UINT16 R/W per. -	CANopen 3006:10$_h$ Modbus 1568
IOsigREF	Signal evaluation for reference switch (302) **1 / Normally Closed**: Normally closed NC **2 / Normally Open**: Normally open NO The reference switch is only active while a reference movement to the reference switch is processed. Setting can only be changed if power stage is disabled. Changed settings become active the next time the power stage is enabled.	- 1 1 2	UINT16 UINT16 R/W per. -	CANopen 3006:E$_h$ Modbus 1564
IOsigRespOfPS	Response to active limit switch during enabling of power stage (132) **0 / Error**: Active limit switch triggers an error. **1 / No Error**: Active limit switch does not trigger an error. Defines the response when the power stage is enabled while a hardware limit switch is active. Changed settings become active immediately.	- 0 0 1	UINT16 UINT16 R/W per. -	CANopen 3006:6$_h$ Modbus 1548
IP_IntTimInd	Interpolation time index	- -128 -3 63	INT8 INT16 R/W - -	CANopen 60C2:2$_h$ Modbus 7002
IP_IntTimPerVal	Interpolation time period value	s 0 1 255	UINT8 UINT16 R/W - -	CANopen 60C2:1$_h$ Modbus 7000
IPp_target	Position reference value for operating mode Interpolated Position	- -2147483648 - 2147483647	INT32 INT32 R/W - -	CANopen 60C1:1$_h$ Modbus 7004
JOGactivate	Activation of operating mode Jog (196) Bit 0: Positive direction of movement Bit 1: Negative direction of movement Bit 2: 0=slow 1=fast Changed settings become active immediately.	- 0 0 7	UINT16 UINT16 R/W - -	CANopen 301B:9$_h$ Modbus 6930

0198441113956, V1.00, 07.2013

Parameter name	Description	Unit Minimum value Factory setting Maximum value	Data type R/W Persistent Expert	Parameter address via field-bus
JOGmethod	Selection of jog method (201) **0 / Continuous Movement**: Jog with continuous movement **1 / Step Movement**: Jog with step movement Changed settings become active immediately.	- 0 1 1	UINT16 UINT16 R/W - -	CANopen 3029:3h Modbus 10502
JOGstep	Distance for step movement (202) Changed settings become active the next time the motor moves.	usr_p 1 20 2147483647	INT32 INT32 R/W per. -	CANopen 3029:7h Modbus 10510
JOGtime	Wait time for step movement (202) Changed settings become active the next time the motor moves.	ms 1 500 32767	UINT16 UINT16 R/W per. -	CANopen 3029:8h Modbus 10512
JOGv_fast	Velocity for fast movement (201) The adjustable value is internally limited to the current parameter setting in RAMP_v_max. Changed settings become active immediately.	usr_v 1 180 2147483647	UINT32 UINT32 R/W per. -	CANopen 3029:5h Modbus 10506
JOGv_slow	Velocity for slow movement (201) The adjustable value is internally limited to the current parameter setting in RAMP_v_max. Changed settings become active immediately.	usr_v 1 60 2147483647	UINT32 UINT32 R/W per. -	CANopen 3029:4h Modbus 10504
LIM_HaltReaction	Halt option code (284) **1 / Deceleration Ramp**: Deceleration ramp **3 / Torque Ramp**: Torque ramp Type of deceleration for Halt. Setting of deceleration ramp with parameter RAMP_v_dec. Setting of torque ramp with parameter LIM_I_maxHalt. If a deceleration ramp is already active, the parameter cannot be written. Changed settings become active immediately.	- 1 1 3	INT16 INT16 R/W per. -	CANopen 605D:0h Modbus 1582

0198441113956, V1.00, 07.2013

Parameter name	Description	Unit Minimum value Factory setting Maximum value	Data type R/W Persistent Expert	Parameter address via field-bus
LIM_I_maxHalt	Current value for Halt (143) This value is only limited by the minimum/ maximum value range (no limitation of this value by motor/power stage). In the case of a Halt, the actual current limit (_Imax_actual) is one of the following values (whichever is lowest): - LIM_I_maxHalt - M_I_max - PA_I_max Further current reductions caused by I2t monitoring are also taken into account during a Halt. Default: PA_I_max at 8 kHz PWM frequency and 230/480 V mains voltage In increments of 0.01 A_{rms}. Changed settings become active immediately.	A_{rms} - - -	UINT16 UINT16 R/W per. -	CANopen 3011:E_h Modbus 4380
LIM_I_maxQSTP	Current value for Quick Stop (142) This value is only limited by the minimum/ maximum value range (no limitation of this value by motor/power stage). In the case of a Quick Stop, the actual current limit (_Imax_actual) is one of the following values (whichever is lowest): - LIM_I_maxQSTP - M_I_max - PA_I_max Further current reductions caused by I2t monitoring are also taken into account during a Quick Stop. Default: PA_I_max at 8 kHz PWM frequency and 230/480 V mains voltage In increments of 0.01 A_{rms}. Changed settings become active immediately.	A_{rms} - - -	UINT16 UINT16 R/W per. -	CANopen 3011:D_h Modbus 4378

0198441113956, V1.00, 07.2013

Parameter name	Description	Unit Minimum value Factory setting Maximum value	Data type R/W Persistent Expert	Parameter address via field-bus
LIM_QStopReact	Quick Stop option code (131) **-2 / Torque ramp (Fault)**: Use torque ramp and transit to operating state 9 Fault **-1 / Deceleration Ramp (Fault)**: Use deceleration ramp and transit to operating state 9 Fault **6 / Deceleration ramp (Quick Stop)**: Use deceleration ramp and remain in operating state 7 Quick Stop **7 / Torque ramp (Quick Stop)**: Use torque ramp and remain in operating state 7 Quick Stop Type of deceleration for Quick Stop. Setting of deceleration ramp with parameter RAMPquickstop. Setting of torque ramp with parameter LIM_I_maxQSTP. If a deceleration ramp is already active, the parameter cannot be written. Changed settings become active immediately.	- -2 6 7	INT16 INT16 R/W per. -	CANopen 3006:18$_h$ Modbus 1584
Mains_reactor	Mains reactor **0 / No**: No **1 / Yes**: Yes Value 0: No mains reactor connected. The nominal power of the power stage is reduced. Value 1: A mains reactor is connected. Setting can only be changed if power stage is disabled. Changed settings become active immediately.	- 0 0 1	UINT16 UINT16 R/W per. -	CANopen 3005:20$_h$ Modbus 1344
MBaddress	Modbus address Valid addresses: 1 to 247 Changed settings become active the next time the product is switched on.	- 1 1 247	UINT16 UINT16 R/W per. -	CANopen 3016:4$_h$ Modbus 5640
MBbaud	Modbus baud rate **9600 / 9600 Baud**: 9600 Baud **19200 / 19200 Baud**: 19200 Baud **38400 / 38400 Baud**: 38400 Baud **115200 / 115200 Baud**: 115200 Baud Changed settings become active the next time the product is switched on.	- 9600 19200 115200	UINT32 UINT32 R/W per. -	CANopen 3016:3$_h$ Modbus 5638
Mfb_ResRatio	Transformation ratio Setting can only be changed if power stage is disabled. Changed settings become active the next time the product is switched on.	- 0.3 - 1.0	UINT16 UINT16 R/W - -	CANopen 305C:17$_h$ Modbus 23598

0198441113956, V1.00, 07.2013

Parameter name	Description	Unit Minimum value Factory setting Maximum value	Data type R/W Persistent Expert	Parameter address via field-bus
MOD_AbsDirection	Direction of absolute movement with Modulo (242) **0 / Shortest Distance**: Movement with shortest distance **1 / Positive Direction**: Movement only in positive direction **2 / Negative Direction**: Movement only in negative direction If the parameter is set to 0, the drive calculates the shortest way to the new target position and starts the movement in the corresponding direction. If the distance to the target position is identical in positive and negative directions, the movement takes place in positive direction. Changed settings become active immediately.	- 0 0 2	UINT16 UINT16 R/W per. -	CANopen 3006:3B$_h$ Modbus 1654
MOD_AbsMultiRng	Multiple ranges for absolut movement with Modulo (243) **0 / Multiple Ranges Off**: Absolute movement in one modulo range **1 / Multiple Ranges On**: Absolute movement in multiple modulo ranges Changed settings become active immediately.	- 0 0 1	UINT16 UINT16 R/W per. -	CANopen 3006:3C$_h$ Modbus 1656
MOD_Enable	Activation of Modulo (131) **0 / Modulo Off**: Modulo is off **1 / Modulo On**: Modulo is on Activating Modulo does not automatically change the value of other parameters. Before changing this value, verify that the parameter settings for the intended application are correct. NOTE: Modulo must be deactivated for Autotuning. Setting can only be changed if power stage is disabled. Changed settings become active immediately.	- 0 0 1	UINT16 UINT16 R/W per. -	CANopen 3006:38$_h$ Modbus 1648
MOD_Max	Maximum position of modulo range (242) The maximum position value of the modulo range must be greater than the minimum position value of the modulo range. The value must not exceed the maximum possible value of position scaling _ScalePOSmax. Setting can only be changed if power stage is disabled. Changed settings become active immediately.	usr_p - 3600 -	INT32 INT32 R/W per. -	CANopen 3006:3A$_h$ Modbus 1652

0198441113956, V1.00, 07.2013

Parameter name	Description	Unit Minimum value Factory setting Maximum value	Data type R/W Persistent Expert	Parameter address via field-bus
MOD_Min	Minimum position of modulo range (242) The minimum position value of the modulo range must be less than the maximum position value of the modulo range. The value must not exceed the maximum possible value of position scaling _ScalePOSmax. Setting can only be changed if power stage is disabled. Changed settings become active immediately.	usr_p - 0 -	INT32 INT32 R/W per. -	CANopen 3006:39h Modbus 1650
MON_ChkTime	Monitoring of time window (319) Adjustment of a time for monitoring of position deviation, speed deviation, speed value and current value. If the monitored value is in the permissible range during the adjusted time, the monitoring function delivers a positive result. The status can be output via a parameterizable output. Changed settings become active immediately.	ms 0 0 9999	UINT16 UINT16 R/W per. -	CANopen 3006:1Dh Modbus 1594
MON_commutat	Commutation monitoring (329) **0 / Off**: Commutation monitoring off **1 / On**: Commutation monitoring on Setting can only be changed if power stage is disabled. Changed settings become active the next time the power stage is enabled.	- 0 1 1	UINT16 UINT16 R/W per. -	CANopen 3005:5h Modbus 1290
MON_GroundFault	Ground fault monitoring (332) **0 / Off**: Ground fault monitoring off **1 / On**: Ground fault monitoring on In exceptional cases, deactivation may be necessary, for example: - Long motor cables Deactivate ground fault monitoring if it responds in an unwanted way. Changed settings become active the next time the product is switched on.	- 0 1 1	UINT16 UINT16 R/W per. expert	CANopen 3005:10h Modbus 1312
MON_HW_Limits	Temporary deactivation of hardware limit switches **0**: No limit switch deactivated **1**: Deactivate positive limit switch **2**: Deactivate negative limit switch **3**: Deactivate both limit switches With this parameter, a PLC can temporarily deactivate hardware limit switches. This is useful if a homing procedure controlled by a PLC is to use a limit switch as a reference switch without an error response of the drive. Changed settings become active immediately.	- 0 0 3	UINT16 UINT16 R/W - -	CANopen 3006:11h Modbus 1570

0198441113956, V1.00, 07.2013

Parameter name	Description	Unit Minimum value Factory setting Maximum value	Data type R/W Persistent Expert	Parameter address via field-bus
MON_I_Threshold	Monitoring of current threshold (325) The system checks whether the drive is below the defined value during the period set with MON_ChkTime. The status can be output via a parameterizable output. The parameter _Iq_act_rms is used as comparison value. In increments of 0.01 A_{rms}. Changed settings become active immediately.	A_{rms} 0.00 0.20 300.00	UINT16 UINT16 R/W per. -	CANopen 3006:1C$_h$ Modbus 1592
MON_IO_SelErr1	First number for the signal output function Selected Error (353) Changed settings become active immediately.	- 0 0 65535	UINT16 UINT16 R/W per. -	CANopen 303B:6$_h$ Modbus 15116
MON_IO_SelErr2	Second number for the signal output function Selected Error (353) Changed settings become active immediately.	- 0 0 65535	UINT16 UINT16 R/W per. -	CANopen 303B:7$_h$ Modbus 15118
MON_IO_SelWar1	First number for the signal output function Selected Warning (353) Changed settings become active immediately.	- 0 0 65535	UINT16 UINT16 R/W per. -	CANopen 303B:8$_h$ Modbus 15120
MON_IO_SelWar2	Second number for the signal output function Selected Warning (353) Changed settings become active immediately.	- 0 0 65535	UINT16 UINT16 R/W per. -	CANopen 303B:9$_h$ Modbus 15122
MON_MainsVolt	Detection and monitoring of mains phases (331) **0 / Automatic Mains Detection**: Automatic detection and monitoring of mains voltage **3 / Mains 1~230 V / 3~480 V**: Mains voltage 230 V (single-phase) or 480 V (three phases) **4 / Mains 1~115 V / 3~208 V**: Mains voltage 115 V (single-phase) or 208 V (three phases) Value 0: As soon as a mains voltage detected, the device automatically checks whether the mains voltage is 115 V or 230 V in the case of single-phase devices or 208 V or 400/480 V in the case of three-phase devices. Values 3 ... 4: If the mains voltage is not detected properly during start-up, the mains voltage to be used can be selected manually. Setting can only be changed if power stage is disabled. Changed settings become active the next time the power stage is enabled.	- 0 0 4	UINT16 UINT16 R/W per. expert	CANopen 3005:F$_h$ Modbus 1310

0198441113956, V1.00, 07.2013

Parameter name	Description	Unit Minimum value Factory setting Maximum value	Data type R/W Persistent Expert	Parameter address via field-bus
MON_p_dif_load_usr	Maximum load-dependent position deviation (following error) (307) The load-dependent position deviation is the difference between the reference position and the actual position caused by the load. The minimum value, the factory setting and the maximum value depend on the scaling factor. Changed settings become active immediately.	usr_p 1 16384 2147483647	INT32 INT32 R/W per. -	CANopen 3006:3E$_h$ Modbus 1660
MON_p_dif_load	Maximum load-dependent position deviation (following error) (307) The load-dependent position deviation is the difference between the reference position and the actual position caused by the load. The parameter MON_p_dif_load_usr allows you to enter the value in user-defined units. In increments of 0.0001 revolution. Changed settings become active immediately.	revolution 0.0001 1.0000 200.0000	UINT32 UINT32 R/W per. -	CANopen 6065:0$_h$ Modbus 1606
MON_p_dif_warn	Maximum load-dependent position deviation (warning) (306) 100.0 % correspond to the maximum position deviation (following error) as specified by means of parameter MON_p_dif_load. Changed settings become active immediately.	% 0 75 100	UINT16 UINT16 R/W per. -	CANopen 3006:29$_h$ Modbus 1618
MON_p_DiffWin_usr	Monitoring of position deviation (319) The system checks whether the drive is within the defined deviation during the period set with MON_ChkTime. The status can be output via a parameterizable output. The minimum value, the factory setting and the maximum value depend on the scaling factor. Changed settings become active immediately.	usr_p 0 16 2147483647	INT32 INT32 R/W per. -	CANopen 3006:3F$_h$ Modbus 1662
MON_p_DiffWin	Monitoring of position deviation (319) The system checks whether the drive is within the defined deviation during the period set with MON_ChkTime. The status can be output via a parameterizable output. The parameter MON_p_DiffWin_usr allows you to enter the value in user-defined units. In increments of 0.0001 revolution. Changed settings become active immediately.	revolution 0.0000 0.0010 0.9999	UINT16 UINT16 R/W per. -	CANopen 3006:19$_h$ Modbus 1586

0198441113956, V1.00, 07.2013

Parameter name	Description	Unit Minimum value Factory setting Maximum value	Data type R/W Persistent Expert	Parameter address via field-bus
MON_p_win_usr	Standstill window, permissible control deviation (312) The control deviation for the standstill window time must be within this range for a standstill of the drive to be detected. Processing of the standstill window must be activated via the parameter MON_p_winTime. The minimum value, the factory setting and the maximum value depend on the scaling factor. Changed settings become active immediately.	usr_p 0 16 2147483647	INT32 INT32 R/W per. -	CANopen 3006:40h Modbus 1664
MON_p_win	Standstill window, permissible control deviation (312) The control deviation for the standstill window time must be within this range for a standstill of the drive to be detected. Processing of the standstill window must be activated via the parameter MON_p_winTime. The parameter MON_p_win_usr allows you to enter the value in user-defined units. In increments of 0.0001 revolution. Changed settings become active immediately.	revolution 0.0000 0.0010 3.2767	UINT32 UINT16 R/W per. -	CANopen 6067:0h Modbus 1608
MON_p_winTime	Standstill window, time (312) Value 0: Monitoring of standstill window deactivated Value >0: Time in ms during which the control deviation must be in the standstill window Changed settings become active immediately.	ms 0 0 32767	UINT16 UINT16 R/W per. -	CANopen 6068:0h Modbus 1610
MON_p_winTout	Timeout time for standstill window monitoring (312) Value 0: Timeout monitoring deactivated Value >0: Timeout time in ms Standstill window processing values are set via MON_p_win and MON_p_winTime. Time monitoring starts when the target position (reference position of position controller) is reached or when the profile generator has finished processing. Changed settings become active immediately.	ms 0 0 16000	UINT16 UINT16 R/W per. -	CANopen 3006:26h Modbus 1612

0198441113956, V1.00, 07.2013

Parameter name	Description	Unit Minimum value Factory setting Maximum value	Data type R/W Persistent Expert	Parameter address via field-bus
MON_SW_Limits	Monitoring of software limit switches (303) **0 / None**: Deactivated **1 / SWLIMP**: Activation of software limit switches positive direction **2 / SWLIMN**: Activation of software limit switches negative direction **3 / SWLIMP+SWLIMN**: Activation of software limit switches both directions Monitoring of software limit switches only works in case of successful homing (ref_ok = 1). Changed settings become active immediately.	- 0 0 3	UINT16 UINT16 R/W per. -	CANopen 3006:3h Modbus 1542
MON_swLimN	Negative position limit for software limit switch (304) Refer to description 'MON_swLimP' Setting can only be changed if power stage is disabled. Changed settings become active the next time the power stage is enabled.	usr_p - -2147483648 -	INT32 INT32 R/W per. -	CANopen 607D:1h Modbus 1546
MON_swLimP	Positive position limit for software limit switch (304) If a user-defined value entered is outside of the permissible range, the limit switch limits are automatically set to the maximum user-defined value. Setting can only be changed if power stage is disabled. Changed settings become active the next time the power stage is enabled.	usr_p - 2147483647 -	INT32 INT32 R/W per. -	CANopen 607D:2h Modbus 1544
MON_tq_win	Torque window, permissible deviation (309) The torque window can only be activated in operating mode Profile Torque. In increments of 0.1 %. Changed settings become active immediately.	% 0.0 3.0 3000.0	UINT16 UINT16 R/W per. -	CANopen 3006:2Dh Modbus 1626
MON_tq_winTime	Torque window, time (309) Value 0: Torque window monitoring deactivated Changing the value causes a restart of torque monitoring. NOTE: Torque window is only used in operating mode Profile Torque. Changed settings become active immediately.	ms 0 0 16383	UINT16 UINT16 R/W per. -	CANopen 3006:2Eh Modbus 1628

0198441113956, V1.00, 07.2013

Parameter name	Description	Unit Minimum value Factory setting Maximum value	Data type R/W Persistent Expert	Parameter address via field-bus
MON_v_DiffWin	Monitoring of velocity deviation (321) The system checks whether the drive is within the defined deviation during the period set with MON_ChkTime. The status can be output via a parameterizable output. Changed settings become active immediately.	usr_v 1 10 2147483647	UINT32 UINT32 R/W per. -	CANopen 3006:1A$_h$ Modbus 1588
MON_v_Threshold	Monitoring of velocity threshold (323) The system checks whether the drive is below the defined value during the period set with MON_ChkTime. The status can be output via a parameterizable output. Changed settings become active immediately.	usr_v 1 10 2147483647	UINT32 UINT32 R/W per. -	CANopen 3006:1B$_h$ Modbus 1590
MON_v_win	Velocity window, permissible deviation (310) Changed settings become active immediately.	usr_v 1 10 2147483647	UINT16 UINT32 R/W per. -	CANopen 606D:0$_h$ Modbus 1576
MON_v_winTime	Velocity window, time (310) Value 0: Velocity window monitoring deactivated Changing the value causes a restart of velocity monitoring. Changed settings become active immediately.	ms 0 0 16383	UINT16 UINT16 R/W per. -	CANopen 606E:0$_h$ Modbus 1578
MON_v_zeroclamp	Velocity limit for Zero Clamp (136) A Zero Clamp operation is only possible if the reference velocity is below the Zero Clamp velocity limit. Changed settings become active immediately.	usr_v 0 10 2147483647	UINT32 UINT32 R/W per. -	CANopen 3006:28$_h$ Modbus 1616
MT_dismax_usr	Maximum permissible distance If the reference value is active and the maximum permissible distance is exceeded, an error of error class 1 is generated. The value 0 switches off monitoring. The minimum value, the factory setting and the maximum value depend on the scaling factor. Changed settings become active the next time the motor moves.	usr_p 0 16384 2147483647	INT32 INT32 R/W - -	CANopen 302E:A$_h$ Modbus 11796

0198441113956, V1.00, 07.2013

Parameter name	Description	Unit Minimum value Factory setting Maximum value	Data type R/W Persistent Expert	Parameter address via field-bus
MT_dismax	Maximum permissible distance If the reference value is active and the maximum permissible distance is exceeded, an error of error class 1 is generated. The value 0 switches off monitoring. The parameter MT_dismax_usr allows you to enter the value in user-defined units. In increments of 0.1 revolution. Changed settings become active the next time the motor moves.	revolution 0.0 1.0 999.9	UINT16 UINT16 R/W - -	CANopen 302E:3_h Modbus 11782
PAR_CTRLreset	Reset controller parameters **0 / No**: No **1 / Yes**: Yes Reset of the controller parameters. The current controller parameters are recalculated on the basis of the motor data of the connected motor. NOTE: Current and velocity limitations are not reset. Therefore, a user parameter reset is required. NOTE: The new settings are not saved to the EEPROM. Setting can only be changed if power stage is disabled. Changed settings become active immediately.	- 0 0 1	UINT16 UINT16 R/W - -	CANopen 3004:7_h Modbus 1038
PAR_ScalingStart	Recalculation of parameters with user-defined units The parameters with user-defined units can be recalculated with a changed scaling factor. Value 0: Inactive Value 1: Initialize recalculation Value 2: Start recalculation Setting can only be changed if power stage is disabled. Changed settings become active immediately.	- 0 0 2	UINT16 UINT16 R/W - -	CANopen 3004:14_h Modbus 1064
PAReeprSave	Save parameter values to EEPROM Value 1: Save persistent parameters The currently set parameters are saved to the non-volatile memory (EEPROM). The saving process is complete when the parameter is read and 0 is returned. Changed settings become active immediately.	- - - -	UINT16 UINT16 R/W - -	CANopen 3004:1_h Modbus 1026

0198441113956, V1.00, 07.2013

Parameter name	Description	Unit Minimum value Factory setting Maximum value	Data type R/W Persistent Expert	Parameter address via field-bus
PARfactorySet	Restore factory settings (default values) (180) **No**: No **Yes**: Yes The parameters are reset to the factory settings and subsequently saved to the EEPROM. The factory settings can be restored via the HMI or the commissioning software. The saving process is complete when the parameter is read and 0 is returned. Setting can only be changed if power stage is disabled. Changed settings become active the next time the product is switched on.	- 0 - 1	 R/W - -	
PARuserReset	Reset user parameters (179) **0 / No**: No **65535 / Yes**: Yes Bit 0: Set persistent user and controller parameters to default values Bits 1 ... 15: Reserved The parameters are reset with the exception of: - Communication parameters - Inversion of direction of movement - Functions of digital inputs and outputs NOTE: The new settings are not saved to the EEPROM. Setting can only be changed if power stage is disabled. Changed settings become active the next time the power stage is enabled.	- 0 - 65535	UINT16 UINT16 R/W - -	CANopen 3004:8h Modbus 1040
PDOmask	Deactivate receive PDO Value 0: Activate receive PDO Value 1: Deactivate receive PDO Changed settings become active immediately.	- 0 0 1	UINT16 UINT16 R/W - -	CANopen 3040:42h Modbus 16516

0198441113956, V1.00, 07.2013

Parameter name	Description	Unit Minimum value Factory setting Maximum value	Data type R/W Persistent Expert	Parameter address via field-bus
PosReg1Mode	Selection of comparison criterion for position register channel 1 (315) **0 / Pact greater equal A**: Current position is greater than or equal to comparison value A for position register channel 1 **1 / Pact less equal A**: Current position is less than or equal to comparison value A for position register channel 1 **2 / Pact in [A-B] (basic)**: Current position is in the range A-B including limits (basic) **3 / Pact out [A-B] (basic)**: Current position is out of the range A-B excluding limits (basic) **4 / Pact in [A-B] (extended)**: Current position is in the range A-B including limits (extended) **5 / Pact out [A-B] (extended)**: Current position is out of the range A-B excluding limits (extended) Changed settings become active immediately.	- 0 0 5	UINT16 UINT16 R/W per. -	CANopen 300B:4h Modbus 2824
PosReg1Source	Selection of source for position register channel 1 **0 / Pact Encoder 1**: Source for position register channel 1 is Pact of encoder 1 Changed settings become active immediately.	- 0 0 0	UINT16 UINT16 R/W per. -	CANopen 300B:6h Modbus 2828
PosReg1Start	Start/stop of position register channel 1 (314) **0 / Off (keep last state)**: Position Register channel 1 is off and status bit keeps last state **1 / On**: Position Register channel 1 is on **2 / Off (set state 0)**: Position Register channel 1 is off and status bit is set to 0 **3 / Off (set state 1)**: Position Register channel 1 is off and status bit is set to 1 Changed settings become active immediately.	- 0 0 3	UINT16 UINT16 R/W - -	CANopen 300B:2h Modbus 2820
PosReg1ValueA	Comparison value A for position register channel 1 (317)	usr_p - 0 -	INT32 INT32 R/W per. -	CANopen 300B:8h Modbus 2832
PosReg1ValueB	Comparison value B for position register channel 1 (317)	usr_p - 0 -	INT32 INT32 R/W per. -	CANopen 300B:9h Modbus 2834

0198441113956, V1.00, 07.2013

Parameter name	Description	Unit Minimum value Factory setting Maximum value	Data type R/W Persistent Expert	Parameter address via field-bus
PosReg2Mode	Selection of comparison criterion for position register channel 2 (315) **0 / Pact greater equal A**: Current position is greater than or equal to comparison value A for position register channel 2 **1 / Pact less equal A**: Current position is less than or equal to comparison value A for position register channel 2 **2 / Pact in [A-B] (basic)**: Current position is in the range A-B including limits (basic) **3 / Pact out [A-B] (basic)**: Current position is out of the range A-B excluding limits (basic) **4 / Pact in [A-B] (extended)**: Current position is in the range A-B including limits (extended) **5 / Pact out [A-B] (extended)**: Current position is out of the range A-B excluding limits (extended) Changed settings become active immediately.	- 0 0 5	UINT16 UINT16 R/W per. -	CANopen 300B:5_h Modbus 2826
PosReg2Source	Selection of source for position register channel 2 **0 / Pact Encoder 1**: Source for position register channel 2 is Pact of encoder 1 Changed settings become active immediately.	- 0 0 0	UINT16 UINT16 R/W per. -	CANopen 300B:7_h Modbus 2830
PosReg2Start	Start/stop of position register channel 2 (314) **0 / Off (keep last state)**: Position Register channel 2 is off and status bit keeps last state **1 / On**: Position Register channel 2 is on **2 / Off (set state 0)**: Position Register channel 2 is off and status bit is set to 0 **3 / Off (set state 1)**: Position Register channel 2 is off and status bit is set to 1 Changed settings become active immediately.	- 0 0 3	UINT16 UINT16 R/W - -	CANopen 300B:3_h Modbus 2822
PosReg2ValueA	Comparison value A for position register channel 2 (317)	usr_p - 0 -	INT32 INT32 R/W per. -	CANopen 300B:A_h Modbus 2836
PosReg2ValueB	Comparison value B for position register channel 2 (317)	usr_p - 0 -	INT32 INT32 R/W per. -	CANopen 300B:B_h Modbus 2838

0198441113956, V1.00, 07.2013

Parameter name	Description	Unit Minimum value Factory setting Maximum value	Data type R/W Persistent Expert	Parameter address via field-bus
PosReg3Mode	Selection of comparison criterion for position register channel 3 (316) **0 / Pact greater equal A**: Current position is greater than or equal to comparison value A for position register channel 3 **1 / Pact less equal A**: Current position is less than or equal to comparison value A for position register channel 3 **2 / Pact in [A-B] (basic)**: Current position is in the range A-B including limits (basic) **3 / Pact out [A-B] (basic)**: Current position is out of the range A-B excluding limits (basic) **4 / Pact in [A-B] (extended)**: Current position is in the range A-B including limits (extended) **5 / Pact out [A-B] (extended)**: Current position is out of the range A-B excluding limits (extended) Changed settings become active immediately.	- 0 0 5	UINT16 UINT16 R/W per. -	CANopen 300B:E_h Modbus 2844
PosReg3Source	Selection of source for position register channel 3 **0 / Pact Encoder 1**: Source for position register channel 3 is Pact of encoder 1 Changed settings become active immediately.	- 0 0 0	UINT16 UINT16 R/W per. -	CANopen 300B:10_h Modbus 2848
PosReg3Start	Start/stop of position register channel 3 (314) **0 / Off (keep last state)**: Position Register channel 3 is off and status bit keep last state **1 / On**: Position Register channel 3 is on **2 / Off (set state 0)**: Position Register channel 3 is off and status bit is set to 0 **3 / Off (set state 1)**: Position Register channel 3 is off and status bit is set to 1 Changed settings become active immediately.	- 0 0 3	UINT16 UINT16 R/W - -	CANopen 300B:C_h Modbus 2840
PosReg3ValueA	Comparison value A for position register channel 3 (317)	usr_p - 0 -	INT32 INT32 R/W per. -	CANopen 300B:12_h Modbus 2852
PosReg3ValueB	Comparison value B for position register channel 3 (317)	usr_p - 0 -	INT32 INT32 R/W per. -	CANopen 300B:13_h Modbus 2854

0198441113956, V1.00, 07.2013

Parameter name	Description	Unit Minimum value Factory setting Maximum value	Data type R/W Persistent Expert	Parameter address via field-bus
PosReg4Mode	Selection of comparison criterion for position register channel 4 (316) **0 / Pact greater equal A**: Current position is greater than or equal to comparison value A for position register channel 4 **1 / Pact less equal A**: Current position is less than or equal to comparison value A for position register channel 4 **2 / Pact in [A-B] (basic)**: Current position is in the range A-B including limits (basic) **3 / Pact out [A-B] (basic)**: Current position is out of the range A-B excluding limits (basic) **4 / Pact in [A-B] (extended)**: Current position is in the range A-B including limits (extended) **5 / Pact out [A-B] (extended)**: Current position is out of the range A-B excluding limits (extended) Changed settings become active immediately.	- 0 0 5	UINT16 UINT16 R/W per. -	CANopen 300B:F_h Modbus 2846
PosReg4Source	Selection of source for position register channel 4 **0 / Pact Encoder 1**: Source for position register channel 4 is Pact of encoder 1 Changed settings become active immediately.	- 0 0 0	UINT16 UINT16 R/W per. -	CANopen 300B:11_h Modbus 2850
PosReg4Start	Start/stop of position register channel 4 (314) **0 / Off (keep last state)**: Position Register channel 4 is off and status bit keeps last state **1 / On**: Position Register channel 4 is on **2 / Off (set state 0)**: Position Register channel 4 is off and status bit is set to 0 **3 / Off (set state 1)**: Position Register channel 4 is off and status bit is set to 1 Changed settings become active immediately.	- 0 0 3	UINT16 UINT16 R/W - -	CANopen 300B:D_h Modbus 2842
PosReg4ValueA	Comparison value A for position register channel 4 (317)	usr_p - 0 -	INT32 INT32 R/W per. -	CANopen 300B:14_h Modbus 2856
PosReg4ValueB	Comparison value B for position register channel 4 (317)	usr_p - 0 -	INT32 INT32 R/W per. -	CANopen 300B:15_h Modbus 2858

0198441113956, V1.00, 07.2013

Parameter name	Description	Unit Minimum value Factory setting Maximum value	Data type R/W Persistent Expert	Parameter address via field-bus
PosRegGroupStart	Start/stop of position register channels **0 / No Channel**: No channel activated **1 / Channel 1**: Channel 1 activated **2 / Channel 2**: Channel 2 activated **3 / Channel 1 & 2**: Channels 1 and 2 activated **4 / Channel 3**: Channel 3 activated **5 / Channel 1 & 3**: Channels 1 and 3 activated **6 / Channel 2 & 3**: Channels 2 and 3 activated **7 / Channel 1 & 2 & 3**: Channels 1, 2 and 3 activated **8 / Channel 4**: Channel 4 activated **9 / Channel 1 & 4**: Channels 1 and 4 activated **10 / Channel 2 & 4**: Channels 2 and 4 activated **11 / Channel 1 & 2 & 4**: Channels 1, 2 and 4 activated **12 / Channel 3 & 4**: Channels 3 and 4 activated **13 / Channel 1 & 3 & 4**: Channels 1, 3 and 4 activated **14 / Channel 2 & 3 & 4**: Channels 2, 3 and 4 activated **15 / Channel 1 & 2 & 3 & 4**: Channels 1, 2, 3 and 4 activated Changed settings become active immediately.	- 0 0 15	UINT16 UINT16 R/W per. -	CANopen 300B:16$_h$ Modbus 2860
PP_ModeRangeLim	Absolute movement beyond movement range (238) **0 / NoAbsMoveAllowed**: Absolute movement beyond movement range is not possible **1 / AbsMoveAllowed**: Absolute movement beyond movement range is possible Setting can only be changed if power stage is disabled. Changed settings become active the next time the power stage is enabled.	- 0 0 1	UINT16 UINT16 R/W per. -	CANopen 3023:7$_h$ Modbus 8974
PP_OpmChgType	Change to operating mode Profile Position during movements (195) **0 / WithStandStill**: Change with standstill **1 / OnTheFly**: Change without standstill Setting can only be changed if power stage is disabled. Changed settings become active the next time the power stage is enabled.	- 0 0 1	UINT16 UINT16 R/W per. -	CANopen 3023:9$_h$ Modbus 8978

0198441113956, V1.00, 07.2013

Parameter name	Description	Unit Minimum value Factory setting Maximum value	Data type R/W Persistent Expert	Parameter address via field-bus
PPoption	Options for operating mode Profile Position (217) Determines the reference position for relative positioning: 0: Relative with reference to the previous target position of the profile generator 1: Not supported 2: Relative with reference to the actual position of the motor Changed settings become active the next time the motor moves.	- 0 0 2	UINT16 UINT16 R/W - -	CANopen 60F2:0_h Modbus 6960
PPp_target	Target position for operating mode Profile Position (216) Minimum/maximum values depend on: - Scaling factor - Software limit switches (if they are activated) Changed settings become active immediately.	usr_p - - -	INT32 INT32 R/W - -	CANopen 607A:0_h Modbus 6940
PPv_target	Target velocity for operating mode Profile Position (216) The target velocity is limited to the setting in CTRL_v_max and RAMP_v_max. Changed settings become active the next time the motor moves.	usr_v 1 60 4294967295	UINT32 UINT32 R/W - -	CANopen 6081:0_h Modbus 6942
PTtq_target	Target torque for operating mode Profile Torque (204) 100.0 % correspond to the continuous stall torque _M_M_0. In increments of 0.1 %. Changed settings become active immediately.	% -3000.0 0.0 3000.0	INT16 INT16 R/W - -	CANopen 6071:0_h Modbus 6944
PVv_target	Target velocity for operating mode Profile Velocity (209) The target velocity is limited to the setting in CTRL_v_max and RAMP_v_max. Changed settings become active immediately.	usr_v - 0 -	INT32 INT32 R/W - -	CANopen 60FF:0_h Modbus 6938
RAMP_tq_enable	Activation of the motion profile for torque (207) **0 / Profile Off**: Profile off **1 / Profile On**: Profile on In the operating mode Profile Torque, the motion profile for torque can be activated or deactivated. In the other operating modes, the motion profile for torque is inactive. Setting can only be changed if power stage is disabled. Changed settings become active immediately.	- 0 1 1	UINT16 UINT16 R/W per. -	CANopen 3006:$2C_h$ Modbus 1624

0198441113956, V1.00, 07.2013

Parameter name	Description	Unit Minimum value Factory setting Maximum value	Data type R/W Persistent Expert	Parameter address via field-bus
RAMP_tq_slope	Slope setting of the motion profile for torque (207) 100.00 % of the torque setting correspond to the continuous stall torque _M_M_0. Example: A ramp setting of 10000.00 %/s results in a torque change of 100.0% of _M_M_0 in 0.01s. In increments of 0.1 %/s. Changed settings become active immediately.	%/s 0.1 10000.0 3000000.0	UINT32 UINT32 R/W per. -	CANopen 6087:0h Modbus 1620
RAMP_v_acc	Acceleration of the motion profile for velocity (265) Writing the value 0 has no effect on the parameter. Changed settings become active the next time the motor moves.	usr_a 1 600 2147483647	UINT32 UINT32 R/W per. -	CANopen 6083:0h Modbus 1556
RAMP_v_dec	Deceleration of the motion profile for velocity The minimum value depends on the operating mode: Operating modes with minimum value 1: Profile Velocity Operating modes with minimum value 120: Jog Profile Position Homing Writing the value 0 has no effect on the parameter. Changed settings become active the next time the motor moves.	usr_a 1 600 2147483647	UINT32 UINT32 R/W per. -	CANopen 6084:0h Modbus 1558
RAMP_v_enable	Activation of the motion profile for velocity (265) **0 / Profile Off**: Profile off **1 / Profile On**: Profile on Setting can only be changed if power stage is disabled. Changed settings become active immediately.	- 0 1 1	UINT16 UINT16 R/W per. -	CANopen 3006:2Bh Modbus 1622

0198441113956, V1.00, 07.2013

Parameter name	Description	Unit Minimum value Factory setting Maximum value	Data type R/W Persistent Expert	Parameter address via field-bus
RAMP_v_jerk	Jerk limitation of the motion profile for velocity (291) **0 / Off**: Off **1 / 1**: 1 ms **2 / 2**: 2 ms **4 / 4**: 4 ms **8 / 8**: 8 ms **16 / 16**: 16 ms **32 / 32**: 32 ms **64 / 64**: 64 ms **128 / 128**: 128 ms Adjustments can only be made if the operating mode is inactive (x_end=1). Changed settings become active the next time the motor moves.	ms 0 0 128	UINT16 UINT16 R/W per. -	CANopen 3006:D_h Modbus 1562
RAMP_v_max	Maximum velocity of the motion profile for velocity (136) If a greater reference speed is set in one of these operating modes, it is automatically limited to RAMP_v_max. This way, commissioning at limited speed is easier to perform. Setting can only be changed if power stage is disabled. Changed settings become active the next time the motor moves.	usr_v 1 13200 2147483647	UINT32 UINT32 R/W per. -	CANopen 607F:0_h Modbus 1554
RAMP_v_sym	Acceleration and deceleration of the motion profile for velocity The values are internally multiplied by 10 (example: 1 = 10 min^{-1}/s). Write access changes the values under RAMP_v_acc and RAMP_v_dec. The limit values are checked on the basis of the values indicated for these parameters. Read access returns the greater value from RAMP_v_acc/RAMP_v_dec. If the value cannot be represented as a 16 bit value, the value is set to 65535 (maximum UINT16 value) Changed settings become active the next time the motor moves.	- - - -	UINT16 UINT16 R/W - -	CANopen 3006:1_h Modbus 1538

0198441113956, V1.00, 07.2013

Parameter name	Description	Unit Minimum value Factory setting Maximum value	Data type R/W Persistent Expert	Parameter address via field-bus
RAMPaccdec	Acceleration and deceleration for the Drive Profile Lexium High word: Acceleration Low word: Deceleration The values are internally multiplied by 10 (example: 1 = 10 min^{-1}/s). Write access changes the values in RAMP_v_acc and RAMP_v_dec. The limit values are checked on the basis of the values indicated for these parameters. If the value cannot be represented as a 16 bit value, the value is set to 65535 (maximum UINT16 value). Changed settings become active the next time the motor moves.	- - - -	UINT32 UINT32 R/W - -	CANopen 3006:2_h Modbus 1540
RAMPquickstop	Deceleration ramp for Quick Stop (287) Deceleration ramp for a software stop or an error with error class 1 or 2. Changed settings become active the next time the motor moves.	usr_a 1 6000 2147483647	UINT32 UINT32 R/W per. -	CANopen 3006:12_h Modbus 1572
RESext_P	Nominal power of external braking resistor (156) Setting can only be changed if power stage is disabled. Changed settings become active the next time the power stage is enabled.	W 1 10 32767	UINT16 UINT16 R/W per. -	CANopen 3005:12_h Modbus 1316
RESext_R	Resistance value of external braking resistor (156) The minimum value depends on the power stage. In increments of 0.01 Ω. Setting can only be changed if power stage is disabled. Changed settings become active the next time the power stage is enabled.	Ω 0.00 100.00 327.67	UINT16 UINT16 R/W per. -	CANopen 3005:13_h Modbus 1318
RESext_ton	Maximum permissible switch-on time of external braking resistor (156) Setting can only be changed if power stage is disabled. Changed settings become active the next time the power stage is enabled.	ms 1 1 30000	UINT16 UINT16 R/W per. -	CANopen 3005:11_h Modbus 1314

0198441113956, V1.00, 07.2013

Parameter name	Description	Unit Minimum value Factory setting Maximum value	Data type R/W Persistent Expert	Parameter address via field-bus
RESint_ext	Selection of type of braking resistor (156) **0 / Standard Braking Resistor**: Standard braking resistor **1 / External Braking Resistor**: External braking resistor **2 / Reserved**: Reserved Setting can only be changed if power stage is disabled. Changed settings become active the next time the power stage is enabled.	- 0 0 2	UINT16 UINT16 R/W per. -	CANopen 3005:9_h Modbus 1298
RMAC_Activate	Activation of relative movement after capture (298) **0 / Off**: Off **1 / On**: On Changed settings become active immediately.	- 0 0 1	UINT16 UINT16 R/W - -	CANopen 3023:C_h Modbus 8984
RMAC_Edge	Edge of capture signal for relative movement after capture (299) **0 / Falling edge**: Falling edge **1 / Rising edge**: Rising edge	- 0 0 1	UINT16 UINT16 R/W per. -	CANopen 3023:10_h Modbus 8992
RMAC_Position	Target position of relative movement after capture (298) Minimum/maximum values depend on: - Scaling factor Changed settings become active the next time the motor moves.	usr_p - 0 -	INT32 INT32 R/W per. -	CANopen 3023:D_h Modbus 8986
RMAC_Response	Response if target postion is overtraveld (299) **0 / Error Class 1**: Error class 1 **1 / No Movement To Target Position**: No movement to target position **2 / Movement To Target Position**: Movement to target position Changed settings become active immediately.	- 0 0 2	UINT16 UINT16 R/W per. -	CANopen 3023:F_h Modbus 8990
RMAC_Velocity	Velocity of relative movement after capture (298) Value 0: Use of current motor velocity Value >0: Value is the target velocity The adjustable value is internally limited to the setting in RAMP_v_max. Changed settings become active the next time the motor moves.	usr_v 0 0 2147483647	UINT32 UINT32 R/W per. -	CANopen 3023:E_h Modbus 8988

0198441113956, V1.00, 07.2013

Parameter name	Description	Unit Minimum value Factory setting Maximum value	Data type R/W Persistent Expert	Parameter address via field-bus
ScalePOSdenom	Position scaling: Denominator (133) Refer to numerator (ScalePOSnum) for a description. A new scaling is activated when the numerator value is supplied. Setting can only be changed if power stage is disabled.	usr_p 1 16384 2147483647	INT32 INT32 R/W per. -	CANopen 3006:7h Modbus 1550
ScalePOSnum	Position scaling: Numerator (133) Specification of the scaling factor: Motor revolutions ---------- User-defined units [usr_p] A new scaling is activated when the numerator value is supplied. Setting can only be changed if power stage is disabled. Changed settings become active immediately.	revolution 1 1 2147483647	INT32 INT32 R/W per. -	CANopen 3006:8h Modbus 1552
ScaleRAMPdenom	Ramp scaling: Denominator (251) Refer to numerator (ScaleRAMPnum) for a description. A new scaling is activated when the numerator value is supplied. Setting can only be changed if power stage is disabled.	usr_a 1 1 2147483647	INT32 INT32 R/W per. -	CANopen 3006:30h Modbus 1632
ScaleRAMPnum	Ramp scaling: Numerator (251) Setting can only be changed if power stage is disabled. Changed settings become active immediately.	min^{-1}/s 1 1 2147483647	INT32 INT32 R/W per. -	CANopen 3006:31h Modbus 1634
ScaleVELdenom	Velocity scaling: Denominator (135) Refer to numerator (ScaleVELnum) for a description. A new scaling is activated when the numerator value is supplied. Setting can only be changed if power stage is disabled.	usr_v 1 1 2147483647	INT32 INT32 R/W per. -	CANopen 3006:21h Modbus 1602

0198441113956, V1.00, 07.2013

Parameter name	Description	Unit Minimum value Factory setting Maximum value	Data type R/W Persistent Expert	Parameter address via field-bus
ScaleVELnum	Velocity scaling: Numerator (135) Specification of the scaling factor: Speed of rotation of motor [min^{-1}] ---------- User-defined units [usr_v] A new scaling is activated when the numerator value is supplied. Setting can only be changed if power stage is disabled. Changed settings become active immediately.	min^{-1} 1 1 2147483647	INT32 INT32 R/W per. -	CANopen 3006:22_h Modbus 1604
ShiftEncWorkRang	Shifting of the encoder working range (154) **0 / Off**: Shifting off **1 / On**: Shifting on Value 0: Position values are between 0 ... 4096 revolutions. Value 1: Position values are between -2048 ... 2048 revolutions. After activating the shifting function, the position range of a multiturn encoder is shifted for half of the range. Example for the position range of a multiturn encoder with 4096 revolutions. Changed settings become active the next time the product is switched on.	- 0 0 1	UINT16 UINT16 R/W per. -	CANopen 3005:21_h Modbus 1346

0198441113956, V1.00, 07.2013

Parameter name	Description	Unit Minimum value Factory setting Maximum value	Data type R/W Persistent Expert	Parameter address via field-bus
SimAbsolutePos	Simulation of absolute position at power cycling **0 / Simulation Off**: Do not use the last mechanical position after power cycling **1 / Simulation On**: Use last mechanical position after power cycling This parameter specifies the way position values are handled over a power cycle and allows for the simulation of an absolute position encoder using singleturn encoders. If this function is activated, the device saves the pertinent position data prior to a shut-down so that it can restore the mechanical position the next time it is switched on. In the case of singleturn encoders, the position can be restored if the motor shaft has not been moved by more than 0.25 revolutions while the drive was off. In the case of multiturn encoders, the permissible shaft movement while the drive is off can be much greater, depending on the type of multiturn encoder. For this function to work, the drive may only be shut down while the motor is at a standstill and the motor shaft must not be moved outside of the permissible range (for example, use a holding brake). Changed settings become active immediately.	- 0 0 1	UINT16 UINT16 R/W per. -	CANopen 3005:23$_h$ Modbus 1350
SyncMechStart	Activation of synchronization mechanism Value 0: Deactivate synchronization mechanism Value 1: Activate synchronization mechanism (CANmotion). Value 2: Activate synchronization mechanism, standard CANopen mechanism. The cycle time of the synchronization signal is derived from the parameters intTimPerVal and intTimInd. Changed settings become active immediately.	- 0 0 2	UINT16 UINT16 R/W - -	CANopen 3022:5$_h$ Modbus 8714
SyncMechStatus	Status of synchronization mechanism Status of synchronization mechanism: Value 1: Synchronization mechanism of drive is inactive. Value 32: Drive is synchronizing with external sync signal. Value 64: Drive is synchronized with external sync signal.	- - - -	UINT16 UINT16 R/- - -	CANopen 3022:6$_h$ Modbus 8716

0198441113956, V1.00, 07.2013

Parameter name	Description	Unit Minimum value Factory setting Maximum value	Data type R/W Persistent Expert	Parameter address via field-bus
SyncMechTol	Synchronization tolerance This parameter is used to increase the synchronization tolerance in the operating mode Interpolated Position. The value is applied when the synchronization mechanism is activated via the parameter SyncMechStart. Changed settings become active immediately.	- 1 1 20	UINT16 UINT16 R/W - -	CANopen 3022:4_h Modbus 8712

0198441113956, V1.00, 07.2013

12 Accessories and spare parts

12

12.1 Commissioning tools

Description	Order no.
Commissioning software, can be downloaded at: www.schneider-electric.com	-
PC connection kit, serial connection between drive and PC, USB-A to RJ45	TCSMCNAM3M002P
Multi-Loader, device for copying the parameter settings to a PC or to another drive	VW3A8121
Modbus cable, 1 m, 2 x RJ45	VW3A8306R10

12.2 Mains supply for slot 1 or slot 2

Description	Order no.
LXM32i connection module mains supply, single-phase	VW3M9001
LXM32i connection module mains supply, three-phase	VW3M9002

12.3 Braking resistors for slot 1 or slot 2

Description	Order no.
LXM32i module standard braking resistor, single-phase 35 Ω, 20 W	VW3M9021
LXM32i module standard braking resistor, three-phase, 70 Ω, 20 W	VW3M9022
LXM32i connection module external braking resistor	VW3M9010

0198441113956, V1.00, 07.2013

12.4 External braking resistors

Description	Order no.
Braking resistor IP65; 27 Ω; maximum continuous power 100 W; 0.75 m connection cable (2.1 mm^2), UL	VW3A7602R07
Braking resistor IP65; 27 Ω; maximum continuous power 100 W; 2 m connection cable (2.1 mm^2), UL	VW3A7602R20
Braking resistor IP65; 27 Ω; maximum continuous power 100 W; 3 m connection cable (2.1 mm^2), UL	VW3A7602R30
Braking resistor IP65; 27 Ω; maximum continuous power 200 W; 0.75 m connection cable (2.1 mm^2), UL	VW3A7603R07
Braking resistor IP65; 27 Ω; maximum continuous power 200 W; 2 m connection cable (2.1 mm^2), UL	VW3A7603R20
Braking resistor IP65; 27 Ω; maximum continuous power 200 W; 3 m connection cable (2.1 mm^2), UL	VW3A7603R30
Braking resistor IP65; 27 Ω; maximum continuous power 400 W; 0.75 m connection cable (2.1 mm^2), UL	VW3A7604R07
Braking resistor IP65; 27 Ω; maximum continuous power 400 W; 2 m connection cable (2.1 mm^2), UL	VW3A7604R20
Braking resistor IP65; 27 Ω; maximum continuous power 400 W; 3 m connection cable (2.1 mm^2), UL	VW3A7604R30
Braking resistor IP65; 72 Ω; maximum continuous power 100 W; 0.75 m connection cable (2.1 mm^2), UL	VW3A7605R07
Braking resistor IP65; 72 Ω; maximum continuous power 100 W; 2 m connection cable (2.1 mm^2), UL	VW3A7605R20
Braking resistor IP65; 72 Ω; maximum continuous power 100 W; 3 m connection cable (2.1 mm^2), UL	VW3A7605R30
Braking resistor IP65; 72 Ω; maximum continuous power 200 W; 0.75 m connection cable (2.1 mm^2), UL	VW3A7606R07
Braking resistor IP65; 72 Ω; maximum continuous power 200 W; 2 m connection cable (2.1 mm^2), UL	VW3A7606R20
Braking resistor IP65; 72 Ω; maximum continuous power 200 W; 3 m connection cable (2.1 mm^2), UL	VW3A7606R30
Braking resistor IP65; 72 Ω; maximum continuous power 400 W; 0.75 m connection cable	VW3A7607R07
Braking resistor IP65; 72 Ω; maximum continuous power 400 W; 2 m connection cable	VW3A7607R20
Braking resistor IP65; 72 Ω; maximum continuous power 400 W; 3 m connection cable	VW3A7607R30

12.5 I/O module with industrial connector for logic type 1 (source)

Description	Order no.
LXM32i Ethernet connection module with industrial connector, 4 digital inputs M8 (source), fieldbus M12, safety function STO	VW3M9106
LXM32i Ethernet connection module with industrial connector, 4 digital inputs M8 (source), fieldbus M12	VW3M9107
LXM32i Ethernet connection module with industrial connector, 2 digital inputs M8 (source), fieldbus M12, safety function STO	VW3M9108
LXM32i Ethernet connection module with industrial connector, 2 digital inputs M8 (source), fieldbus M12	VW3M9109

0198441113956, V1.00, 07.2013

12.6 I/O module with industrial connector for logic type 2 (sink)

Description	Order no.
LXM32i Ethernet connection module with industrial connector, 4 digital inputs M8 (sink), fieldbus M12, safety function STO	VW3M9206
LXM32i Ethernet connection module with industrial connector, 4 digital inputs M8 (sink), fieldbus M12	VW3M9207
LXM32i Ethernet connection module with industrial connector, 2 digital inputs M8 (sink), fieldbus M12, safety function STO	VW3M9208
LXM32i Ethernet connection module with industrial connector, 2 digital inputs M8 (sink), fieldbus M12	VW3M9209

12.7 I/O module with spring terminals

Description	Order no.
LXM32i Ethernet connection module with spring terminals (sink/source), 4 digital inputs, 2 digital outputs, safety function STO, 7 blind plugs	VW3M9110
Cable glands M8 for signals and STO, 12 pieces	VW3M9508
Cable glands M12 for fieldbus, 10 pieces	VW3M9512

12.8 Memory cards

Description	Order no.
Memory card for copying parameter settings	VW3M8705
25 memory cards for copying parameter settings	VW3M8704

0198441113956, V1.00, 07.2013

12.9 Cables for safety function STO

Description	Order no.
Pre-assembled cable for the safety function STO, 3 m, 3 x 0.34 mm^2, industrial connector M8, other cable end open	VW3M9403
Pre-assembled cable for the safety function STO, 5 m, 3 x 0.34 mm^2, industrial connector M8, other cable end open	VW3M9405
Pre-assembled cable for the safety function STO, 10 m, 3 x 0.34 mm^2, industrial connector M8, other cable end open	VW3M9410
Pre-assembled cable for the safety function STO, 15 m, 3 x 0.34 mm^2, industrial connector M8, other cable end open	VW3M9415
Pre-assembled cable for the safety function STO, 20 m, 3 x 0.34 mm^2, industrial connector M8, other cable end open	VW3M9420
Connector, STO output, industrial connector, M8 connector	VW3L50010
Pre-assembled cable for the safety function STO, 3 m, 3 x 0.34 mm^2, industrial connector M8, female connector M8, shielded	VW3M94CR03
Pre-assembled cable for the safety function STO, 5 m, 3 x 0.34 mm^2, industrial connector M8, female connector M8, shielded	VW3M94CR05
Pre-assembled cable for the safety function STO, 10 m, 3 x 0.34 mm^2, industrial connector M8, female connector M8, shielded	VW3M94CR10
Pre-assembled cable for the safety function STO, 15 m, 3 x 0.34 mm^2, industrial connector M8, female connector M8, shielded	VW3M94CR15
Pre-assembled cable for the safety function STO, 20 m, 3 x 0.34 mm^2, industrial connector M8, female connector M8, shielded	VW3M94CR20

12.10 Industrial plug connectors

Description	Order no.
Connector kit, CANopen/RS485 (2 pieces), industrial connector M8, female connector M8	VW3L5F000
Connector kit, EtherCAT (2 pieces), industrial connector M8, industrial connector M8	VW3L5E000
Connector kit, 2 x I/O, industrial connector M8	VW3L50200
Connector kit, 3 x I/O, industrial connector M8	VW3L50300
Connector, STO output, industrial connector, M8 connector	VW3L50010

12.11 EtherCAT cables with connectors

Description	Order no.
EtherCAT cable, 1 m, M12 connector, M12 connector, straight	TCSECL1M1M1S2
EtherCAT cable, 10 m, M12 connector, M12 connector, straight	TCSECL1M1M10S2
EtherCAT cable, 1 m, M12 connector, RJ45 connector, straight	TCSECL1M3M1S2
EtherCAT cable, 3 m, M12 connector, RJ45 connector, straight	TCSECL1M3M3S2
EtherCAT cable, 10 m, M12 connector, RJ45 connector, straight	TCSECL1M3M10S2
EtherCAT cable, 25 m, M12 connector, RJ45 connector, straight	TCSECL1M3M25S2
EtherCAT cable, 40 m, M12 connector, RJ45 connector, straight	TCSECL1M3M40S2

0198441113956, V1.00, 07.2013

13 Service, maintenance and disposal

13

The product may only be repaired by a Schneider Electric customer service center. No warranty or liability is accepted for repairs made by unauthorized persons.

13.1 Service address

If you cannot resolve an error yourself please contact your sales office. Have the following details available:

- Nameplate (type, identification number, serial number, DOM, ...)
- Type of error (with LED flash code or error number)
- Previous and concomitant circumstances
- Your own assumptions concerning the cause of the error

Also include this information if you return the product for inspection or repair.

If you have any questions please contact your sales office. Your sales office staff will be happy to give you the name of a customer service office in your area.

http://www.schneider-electric.com

13.2 Maintenance

Check the product for pollution or damage at regular intervals.

Repairs may only be made by the manufacturer. No warranty or liability is accepted for repairs made by unauthorized persons.

Repairs cannot be made with the device installed.

Prior to any type of work on the drive system, consult the chapters on Installation and Commissioning for information on the precautions and processes to be observed.

Include the following points in the maintenance plan of your machine.

Connections and fastening

- Check all connection cables and connectors regularly for damage. Replace damaged cables immediately.
- Check that all output elements are firmly seated.
- Tighten all mechanical and electrical threaded connections to the specified torque. Check the union nuts at the connection cables.

Lubricating the shaft sealing ring

In the case of motors with shaft sealing ring, lubricant must be applied to the space between the sealing lip of the shaft sealing ring and the shaft with a suitable non-metallic tool. If the shaft sealing rings are allowed to run dry, the service life of the shaft sealing rings will be significantly reduced.

0198441113956, V1.00, 07.2013

Cleaning

⚠ WARNING

UNEXPECTED MOVEMENT

If the permissible ambient conditions are exceeded, external substances from the environment may penetrate and cause unexpected movement or equipment damage.

- Verify that the ambient conditions are met.
- Do not allow seals to run dry.
- Keep liquids from getting to the shaft bushing (for example in mounting position IM V3).
- Do not expose the shaft sealing rings and cable entries to the direct spray of a pressure washer.

Failure to follow these instructions can result in death, serious injury or equipment damage.

Clean dust and dirt off the product at regular intervals. Insufficient heat dissipation to the ambient air may excessively increase the temperature.

Motors are not suitable for cleaning with a pressure washer. The high pressure may force water into the motor.

When using solvents or cleaning agents, verify that the cables, cable entry seals, O-rings and motor paint are not damaged.

Checking/running in the holding brake

Occasional braking while the load moves helps to maintain the holding torque of the holding brake. If the brake does not work mechanically for an extended period of time, parts of the holding brake may corrode. Corrosion reduces the holding torque.

The holding brake is factory run in. If the holding brake does not work mechanically for an extended period of time, parts of the holding brake may corrode. If the holding brake does not have the holding torque indicated in the technical data, it must be run in again.

- ■ The motor is dismounted. The holding brake is applied.
- ▸ Check the holding torque of the holding brake using a torque wrench.
- ▸ Compare the value to the specified holding torque of the holding brake when it was delivered. See chapter "7.5.6 Holding brake (option)".
- ▸ If the holding torque of the holding brake considerably differs from the specified values, manually rotate the motor shaft by 25 rotations in both directions.
- ▸ Repeat the process. Contact your sales office if you cannot restore the original holding torque by repeating the process 3 times.

Replacing the rolling bearing

The customer must not replace the rolling bearing. The motor will be partially demagnetized by this procedure and lose power.

13.2.1 Lifetime safety function STO

The STO safety function is designed for a lifetime of 20 years. After this period, the data of the safety function are no longer valid. The

0198441113956, V1.00, 07.2013

expiry date is determined by adding 20 years to the DOM shown on the nameplate of the product.

- This date must be included in the maintenance plan of the system.

  Do not use the safety function after this date.

Example The DOM on the nameplate of the product is shown in the format DD.MM.YY, for example 31.12.08. (31 December 2008). This means: Do not use the safety function after December 31, 2028.

0198441113956, V1.00, 07.2013

13.3 Replacing the product

DANGER

ELECTRIC SHOCK

Opening the side wall exposes hazardous voltages and damages the insulation.

- Do not open the side wall.

Failure to follow these instructions will result in death or serious injury.

WARNING

UNINTENDED BEHAVIOR

Unsuitable settings or unsuitable data may trigger unexpected movements, trigger signals, damage parts and disable monitoring functions.

- Do not operate the drive system with unknown settings or data.
- Verify that the stored data and settings are correct.
- When commissioning, carefully run tests for all operating states and potential error situations.
- Verify the functions after replacing the product and also after making changes to the settings or data.
- Only start the system if there are no persons or obstructions in the hazardous area.

Failure to follow these instructions can result in death, serious injury or equipment damage.

In the case of damage to a product, replace both BMi and LXM32i (do not replace one of the two individually).

Observe the following procedure when replacing devices.

- Save all parameter settings. To do so, use a memory card, see chapter "7.7 Memory Card", page 176, or save the data to a PC using the commissioning software, see chapter "7.7.1 Data exchange with the memory card", page 177.
- Switch off all supply voltages. Verify that no voltages are present (safety instructions).
- Label all connections and remove all connection cables (unlock connector locks).
- Uninstall the product.
- Note the identification number and the serial number shown on the product nameplate for later identification.
- Install the new product as per chapter "6 Installation".
- If the product to be installed has previously been used in a different system or application, you must restore the factory settings before commissioning the product.
- Commission the product as per chapter "7 Commissioning".

0198441113956, V1.00, 07.2013

13.4 Shipping, storage, disposal

Note the ambient conditions on page 24.

Shipping The product must be protected against shocks during transportation. If possible, use the original packaging for shipping.

Storage The product may only be stored in spaces where the specified permissible ambient conditions are met.
Protect the product from dust and dirt.

Disposal The product consists of various materials that can be recycled. Dispose of the product in accordance with local regulations.

Visit http://www.schneider-electric.com for information and documents on environmental protection as per ISO 14025 such as:

- EoLi (Product End-of-Life Instructions)
- PEP (Product Environmental Profile)

0198441113956, V1.00, 07.2013

14 Glossary

14

14.1 Units and conversion tables

The value in the specified unit (left column) is calculated for the desired unit (top row) with the formula (in the field).

Example: conversion of 5 meters [m] to yards [yd]
5 m / 0.9144 = 5.468 yd

14.1.1 Length

	in	ft	yd	m	cm	mm
in	-	/ 12	/ 36	* 0.0254	* 2.54	* 25.4
ft	* 12	-	/ 3	* 0.30479	* 30.479	* 304.79
yd	* 36	* 3	-	* 0.9144	* 91.44	* 914.4
m	/ 0.0254	/ 0.30479	/ 0.9144	-	* 100	* 1000
cm	/ 2.54	/ 30.479	/ 91.44	/ 100	-	* 10
mm	/ 25.4	/ 304.79	/ 914.4	/ 1000	/ 10	-

14.1.2 Mass

	lb	oz	slug	kg	g
lb	-	* 16	* 0.03108095	* 0.4535924	* 453.5924
oz	/ 16	-	* $1.942559*10^{-3}$	* 0.02834952	* 28.34952
slug	/ 0.03108095	/ $1.942559*10^{-3}$	-	* 14.5939	* 14593.9
kg	/ 0.45359237	/ 0.02834952	/ 14.5939	-	* 1000
g	/ 453.59237	/ 28.34952	/ 14593.9	/ 1000	-

14.1.3 Force

	lb	oz	p	N
lb	-	* 16	* 453.55358	* 4.448222
oz	/ 16	-	* 28.349524	* 0.27801
p	/ 453.55358	/ 28.349524	-	* $9.807*10^{-3}$
N	/ 4.448222	/ 0.27801	/ $9.807*10^{-3}$	-

14.1.4 Power

	HP	W
HP	-	* 746
W	/ 746	-

0198441113956, V1.00, 07.2013

14.1.5 Rotation

	min^{-1} (RPM)	**rad/s**	**deg./s**
min^{-1} (RPM)	-	* π / 30	* 6
rad/s	* 30 / π	-	* 57.295
deg./s	/ 6	/ 57.295	-

14.1.6 Torque

	lb·in	**lb·ft**	**oz·in**	**Nm**	**kp·m**	**kp·cm**	**dyne·cm**
lb·in	-	/ 12	* 16	* 0.112985	* 0.011521	* 1.1521	* $1.129*10^6$
lb·ft	* 12	-	* 192	* 1.355822	* 0.138255	* 13.8255	* $13.558*10^6$
oz·in	/ 16	/ 192	-	* $7.0616*10^{-3}$	* $720.07*10^{-6}$	* $72.007*10^{-3}$	* 70615.5
Nm	/ 0.112985	/ 1.355822	/ $7.0616*10^{-3}$	-	* 0.101972	* 10.1972	* $10*10^6$
kp·m	/ 0.011521	/ 0.138255	/ $720.07*10^{-6}$	/ 0.101972	-	* 100	* $98.066*10^6$
kp·cm	/ 1.1521	/ 13.8255	/ $72.007*10^{-3}$	/ 10.1972	/ 100	-	* $0.9806*10^6$
dyne·cm	/ $1.129*10^6$	/ $13.558*10^6$	/ 70615.5	/ $10*10^6$	/ $98.066*10^6$	/ $0.9806*10^6$	-

14.1.7 Moment of inertia

	$lb·in^2$	**$lb·ft^2$**	**$kg·m^2$**	**$kg·cm^2$**	**$kp·cm·s^2$**	**$oz·in^2$**
$lb·in^2$	-	/ 144	/ 3417.16	/ 0.341716	/ 335.109	* 16
$lb·ft^2$	* 144	-	* 0.04214	* 421.4	* 0.429711	* 2304
$kg·m^2$	* 3417.16	/ 0.04214	-	* $10*10^3$	* 10.1972	* 54674
$kg·cm^2$	* 0.341716	/ 421.4	/ $10*10^3$	-	/ 980.665	* 5.46
$kp·cm·s^2$	* 335.109	/ 0.429711	/ 10.1972	* 980.665	-	* 5361.74
$oz·in^2$	/ 16	/ 2304	/ 54674	/ 5.46	/ 5361.74	-

14.1.8 Temperature

	°F	**°C**	**K**
°F	-	(°F - 32) * 5/9	(°F - 32) * 5/9 + 273.15
°C	°C * 9/5 + 32	-	°C + 273.15
K	(K - 273.15) * 9/5 + 32	K - 273.15	-

14.1.9 Conductor cross section

AWG	1	2	3	4	5	6	7	8	9	10	11	12	13
mm^2	42.4	33.6	26.7	21.2	16.8	13.3	10.5	8.4	6.6	5.3	4.2	3.3	2.6

AWG	14	15	16	17	18	19	20	21	22	23	24	25	26
mm^2	2.1	1.7	1.3	1.0	0.82	0.65	0.52	0.41	0.33	0.26	0.20	0.16	0.13

0198441113956, V1.00, 07.2013

14.2 Terms and Abbreviations

See chapter "2.6 Standards and terminology" for information on the pertinent standards on which many terms are based. Some terms and abbreviations may have specific meanings with regard to the standards.

AC Alternating current

Actual position Current position of moving components in the drive system.

DC Direct current

DC bus Circuit that supplies the power stage with energy (direct voltage).

DOM **D**ate **o**f **m**anufacturing: The nameplate of the product shows the date of manufacture in the format DD.MM.YY or in the format DD.MM.YYYY. For example:
31.12.11 corresponds to December 31, 2011
31.12.2011 corresponds to December 31, 2011

Degree of protection The degree of protection is a standardized specification for electrical equipment that describes the protection against the ingress of foreign objects and water (for example: IP 20).

Direction of rotation Rotation of the motor shaft in a positive or negative direction of rotation. Positive direction of rotation is when the motor shaft rotates clockwise as you look at the end of the protruding motor shaft.

DriveCom Specification of the DSP402 state machine was created in accordance with the DriveCom specification.

EDS (**E**lectronic **D**ata **S**heet); contains the specific properties of a product.

EMC Electromagnetic compatibility

Encoder Sensor that converts a measured distance or angle into an electrical signal. This signal is evaluated by the drive to determine the actual position of a shaft (rotor) or a driving unit.

Error Discrepancy between a detected (computed, measured or signaled) value or condition and the specified or theoretically correct value or condition.

Error class Classification of errors into groups. The different error classes allow for specific responses to errors, for example by severity.

Factory setting Factory settings when the product is shipped

Fatal error In the case of fatal error, the product is no longer able to control the motor so that the power stage must be immediately disabled.

Fault Fault is a state that can be caused by an error. Further information can be found in the pertinent standards such as IEC 61800-7, ODVA Common Industrial Protocol (CIP).

Fault reset A function used to restore the drive to an operational state after a detected error is cleared by removing the cause of the error so that the error is no longer active.

Holding brake The holding brake in the motor has the task of holding the current motor position when the power stage is disabled, even if external forces act (for example, in the case of a vertical axis). The holding brake is not a safety function and not a service brake.

I/O Inputs/outputs

0198441113956, V1.00, 07.2013

I^2t monitoring	Anticipatory temperature monitoring. The expected temperature rise of components is calculated in advance on the basis of the motor current. If a limit value is exceeded, the drive reduces the motor current.
IT mains	Mains in which all active components are isolated from ground or are grounded by a high impedance. IT: isolé terre (French), isolated ground. Opposite: Grounded mains, see TT/TN mains
Inc	Increments
Index pulse	Signal of an encoder to reference the rotor position in the motor. The encoder returns one index pulse per revolution.
Internal units	Resolution of the power stage at which the motor can be positioned. Internal units are specified in increments.
Limit switch	Switches that signal overtravel of the permissible range of travel.
Mapping	Assignment of object dictionary entries to PDOs
PELV	Protective Extra Low Voltage, low voltage with isolation. For more information: IEC 60364-4-41
PLC	Programmable logic controller
Parameter	Device data and values that can be read and set (to a certain extent) by the user.
Persistent	Indicates whether the value of the parameter remains in the memory after the device is switched off.
Power stage	The power stage controls the motor. The power stage generates current for controlling the motor on the basis of the positioning signals from the controller.
Quick Stop	The Quick Stop function can be used for fast deceleration of a movement in the case of an error or via a command.
RCD	RCD residual current device.
rms	"Root Mean Square" value of a voltage (V_{rms}) or a current (A_{rms})
RS485	Fieldbus interface as per EIA-485 which enables serial data transmission with multiple devices.
Scaling factor	This factor is the ratio between an internal unit and a user-defined unit.
TT mains, TN mains	Grounded mains, differ in terms of the ground connection (PE conductor connection). Opposite: Ungrounded mains, see IT mains.
User-defined unit	Unit whose reference to motor movement can be determined by the user via parameters.
Warning	If the term is used outside the context of safety instructions, a warning alerts to a potential problem that was detected by a monitoring function. A warning does not cause a transition of the operating state.

0198441113956, V1.00, 07.2013

15 Index

15

400/480V 3-phase devices UL 46

A

Abbreviations 479
Access channels 184
Accessories
External braking resistor, data 43
Accessories and spare parts 467
Ambient conditions 24
Autotuning 157
Autotuning, enhanced settings 161

B

Before you begin
Safety information 17
Braking resistor 42, 107
External 43
Rating 63
Selection 64

C

Cable installation - EMC requirements 55
Cables 56
Cable specifications
External braking resistor 108
Graphic display terminal 115
PC 115
Protected cable installation 71
CAD data 11
Category 0 stop 69
Category 1 stop 69
Certifications 46
Commissioning 117
Autotuning 157
Controller optimization with step response 164
Controller structure 164
Default settings and optimization . 172
Digital inputs and outputs 144
Direction of movement, test 149
Enhanced settings for autotuning 161
Limit switches, testing 145
Parameters for braking resistor 155
Safety function STO, test 146
setting parameters for encoder 151
steps 140
Velocity controller optimization 167
Commissioning software 121
Setting reference value signal 166
Step function 166
Connection
Mains supply 113
Controller
Structure 164
Values 166
Controller optimization with step response 164
Current controller
Function 164, 266

0198441113956, V1.00, 07.2013

Cyclic Synchronous Position 236
Cyclic Synchronous Torque 234
Cyclic Synchronous Velocity 235

D

Declaration of conformity 47
Definition
STO 69
Degree of protection 25, 29
Determining controller parameter values
Controller parameter values for rigid mechanical systems 169
Device overview 13
Diagnostics 339
Digital inputs and outputs
Display and modify 144
Direction of movement, test 149
Direction of rotation ->Direction of movement 149
Disposal 471, 475
DOM 479

E

Electrical installation 87
EMC 54
Cable installation 55
Improvement of EMC 55
Power supply 55
Shielded cables 54
Encoder 41
Multiturn 41, 41
Singleturn 41
Equipotential bonding conductors 56
Error class 187, 352
Error response 187
Meaning 187, 352
Examples 333
External braking resistor
Cable specifications 108
Connection 109
External braking resistors 43

F

Fault Reset 187
Force for pressing on 38
Frequency power stage 29
Functional safety 20, 32, 51
Further reading 12
Fuses UL 46

G

General features 28
Glossary 477

H

Hazard categories 18
Holding brake 147
Homing 220

I

Improvement of EMC 55
Installation 81
electrical 87
Intended use 17
Internal mains filter 44
Introduction 13
IP degree of protection 25
IT mains, operation in 60

0198441113956, V1.00, 07.2013

J

Jog 196

L

Limit switches, testing 145
Limit values
Setting 141

M

Mains filter 62
internal 44
Mains reactor 61
Mains supply, connection 112
Maintenance 471
Manuals
Source 11
Maximum force during pressing on 38
Mechanical system, design for control system 166
Monitoring
Braking resistor 64
Monitoring functions 77
Motor-specific data 33
Mounting distances 85
Mounting position 85
Multiturn 41, 41

O

Operating mode
Cyclic Synchronous Position 236
Cyclic Synchronous Torque 234
Cyclic Synchronous Velocity 235
Homing 220
Jog 196
Profile Position 214
Profile Torque 204
Profile Velocity 209
Operating modes 194
Operating modes, starting and changing 194
Operating modes, starting and changing 194
Operating state 140
Operating state, changing the 191
Operating states 186
Indicating operating states 189
Operating state, changing the 191
State diagram 186
Operating states, indication 189
Operation 181
Optimization of default settings 172
Overview 120
Overvoltage category
UL 46

P

Parameter
representation 384
Parameters 383
Parameters for braking resistor 155
PC
Connection 115, 122

0198441113956, V1.00, 07.2013

Position controller
Function 164, 266
optimizing 173
Power stage frequency 29
Power stage supply
Connection 112
Power supply - EMC requirements 55
Pressing on
Maximum force 38
Profile Position 214
Profile Torque 204
Profile Velocity 209
Property class
Screws 45
Protected cable installation 71
PWM frequency 29

Q

Qualification of personnel 17

R

Rating information
Braking resistor 65
Rating of braking resistor 63
Reference value filter 169
Reference value signal
Setting 166
Replacing the product 474
Resetting error message 187
Restoring factory settings 180

S

Safe Torque Off 69
Definition 69, 69
Safety disconnect moment 69
Safety function 69
Application examples 74
Category 0 stop 69
Category 1 stop 69
Definition 69
Definitions 69
Requirements 70
Safety function STO, test 146
Sampling period 267, 268, 269
Scaling 248
Scaling factor 248
Service 471
Service address 471
Setting parameters for encoder 151
Shaft sealing ring 29
Shaft-specific data 38
Shield - EMC requirements 54
Shipping 475
SinCos Multiturn 41, 41
SinCos Singleturn 41, 41
Singleturn 41, 41
Source
CAD data 11
Commissioning software 121
Manuals 11
Speed controller, see Velocity controller
State diagram 186
State machine 140
State transitions 188
Step function 166
STO 69
Application examples 74
Definitions 69
Requirements 70

0198441113956, V1.00, 07.2013

Storage 475
Surrounding air temperature UL 46

T

Technical data 23
Terms 479
Tightening torques
Screws 45
Troubleshooting 339
TÜV certificate for functional safety 50
Type code 15

U

UL
400/480V 3-phase devices 46
Fuses 46
Overvoltage category 46
Surrounding air temperature 46
UL, conditions for
Wiring 46
Units and conversion tables 477
usr_a 248
usr_p 248
usr_v 248

V

Velocity controller
Function 164, 266
Setting 167
Ventilation 85

W

Wiring diagram
Graphic display terminal 115
PC 115
Wiring UL 46

0198441113956, V1.00, 07.2013